DRAWING INDEX:

EA–0101	DRAWING INDEX, GENERAL NOTES, LEGEND AND SYMBOLS
EA–0201	FDAS RISER DIAGRAM
EA–0202	PA/BGM RISER DIAGRAM CCTV RISER DIAGRAM
EA–0203	TEL/DATA RISER DIAGRAM, DOOR ACCESS SYSTEM, BIOMETRICS RISER DIAGRAM
EA–0301	GROUND FLOOR FDAS & PA/BGM LAYOUT
EA–0302	SECOND FLOOR FDAS & PA/BGM LAYOUT
EA–0303	THIRD FLOOR FDAS & PA/BGM LAYOUT
EA–0304	ROOF DECK FDAS LAYOUT
EA–0305	AUXILIARY BUILDING FDAS LAYOUT
EA–0501	GROUND FLOOR TEL/DATA & CCTV LAYOUT
EA–0502	SECOND FLOOR TEL/DATA & CCTV LAYOUT
EA–0503	THIRD FLOOR TEL/DATA & CCTV LAYOUT
EA–0504	ROOF DECK CCTV LAYOUT
EA–3001	MISCELLANEOUS DETAILS
EA–3002	MISCELLANEOUS DETAILS

GENERAL NOTES:

1. WIRINGS SHALL BE IN CONCEALED CONDUIT/ TRUNKING UNLESS OTHERWISE SPECIFIED.
2. THE POSITION OF ALL ELECTRONICS EQUIPMENT AS SHOWN IN THE DRAWINGS ARE APPROXIMATE ONLY. THE EXACT POSITIONS SHALL BE DETERMINED ON SITE.
3. THE SPECIALTY CONTRACTOR SHALL BE RESPONSIBLE FOR THE LABELING OF ALL EQUIPMENT THRU–OUT THE INSTALLATION.
4. THE SPECIALTY CONTRACTOR SHALL BE RESPONSIBLE TO LIAISE WITH THE LOCAL GOVERNMENT FOR ALL CLEARANCES, CABLE JOINTING, AND TESTING FOR THE INSTALLATION.
5. THE OVERALL RESISTANCE FOR THE EARTHING SYSTEM TELECOMMUNICATION & LOW VOLTAGE EQUIPMENT SHALL COMPLY WITH THE LATEST EDITION OF THE PHILIPPINE ELECTRICAL AND ELECTRONICS CODE.
6. THE SPECIALTY CONTRACTOR SHALL BE RESPONSIBLE FOR SEALING OF ALL CABLE/CONDUIT PENETRATION OPENINGS BETWEEN FLOOR SLAB AND WALLS ETC. WITH APPROVED FIRE RATING MATERIAL/SEALANT.
7. THE SPECIALTY CONTRACTOR SHALL FURNISH ALL NECESSARY LABOR, MATERIALS AND EQUIPMENT FOR SATISFACTORY COMPLETION OF THE ENTIRE ELECTRONICS SYSTEM INSTALLATION AS GENERALLY DESCRIBED IN THE SPECIFICATION AND/OR SHOWN ON DRAWINGS.
8. ALL ELECTRONICS EQUIPMENT AND LOCATIONS SHOWN ARE INDICATIVE ONLY, AND THE SPECIALTY CONTRACTOR MUST CO–ORDINATE WITH THE ARCHITECT AND OR THE INTERIOR DESIGNER, AS WELL AS EQUIPMENT SUPPLIERS FOR FINALITY.

GENERAL NOTES FOR FDAS:

1. FIRE ALARM SYSTEM SHALL BE FULLY–ADDRESSABLE, AND SHALL BE NSTALLED IN ACCORDANCE WITH NFPA 70 AND NFPA 72. SYSTEM SHALL ALSO MEET ALL APPLICABLE BUILDING CODES, FIRE CODES AND THE REQUIREMENTS OF THE AUTHORITY HAVING JURISDICTION AND INSURANCE CARRIER. VERIFY REQUIREMENTS PRIOR TO CONSTRUCTION.
2. RISER DIAGRAMS ARE DIAGRAMMATIC ONLY. THE CONTRACTOR SHALL REFER TO THE LAYOUT FOR ACTUAL NO. OF DEVICES.
3. WIRING SHOWN SHALL BE FOR CONTRACTORS GUIDE SUBJECTS TO MANUFACTURER'S FINAL WIRING REQUIREMENTS.
4. PROVIDE ALL EQUIPMENT AND LABOR REQUIRED FOR A COMPLETE AND OPERATIONAL FIRE ALARM SYSTEM.
5. PROVIDE AUDIBLE AND VISIBLE NOTIFICATION APPLIANCES AS INDICATED ON THE DRAWINGS.
6. DO NOT INSTALL SMOKE DETECTORS IN A DIRECT AIR FLOW NOR CLOSER TO THAN 3 FEET FROM AN AIR SUPPLY DIFFUSER OR RETURN AIR OPENING.
7. ANY ITEM REQUIRED IN THE SYSTEMS NOT SHOWN IN THE DRAWINGS AND SPECIFICATIONS SHALL BE CONSIDERED TO BE PART OF THE SCOPE OF WORK.
8. REFER TO SPECIFICATIONS FOR ADDITIONAL INFORMATION.

GENERAL NOTES FOR ACCESS CONTROL:

1. THE PURPOSE OF THIS SCHEMATIC IS TO PROVIDE A GENERAL CONCEPT AND PRINCIPLE OF THE PROPOSED ACCESS CONTROL SYSTEM.
1. QUANTITY AND LOCATION OF DEVICES ARE INDICATIVE ONLY. REFER TO PLAN LAYOUT FOR FINAL QUANTITY AND LOCATION OF DEVICES.
2. WIRES TO BE USED FOR THE POWER SUPPLY ON THE RESPECTIVE MODULES SHALL BE #16 AWG THHN SOLID.
3. ACCESS CONTROL SYSTEM CONTRACTOR SHALL SUPPLY AND INSTALL ALL THE REQUIRED DEVICES ACCESSORIES INCLUDING SOFTWARE FOR THE SYSTEM TO BE FULLY OPERATIONAL.
4. USE PVC FOR CONDUIT EMBEDDED ON SLAB OR IMC FOR EXPOSED PART.
5. CONDUIT FILL

CONDUIT SIZE (mm)	20	25	32	40	50
4PR CAT6 UTP CABLE	3	6	8	13	21

GENERAL NOTES FOR TELECOMS:

1. ALL TELECOM/AUXILIARY WORKS AND INSTALLATIONS HEREIN SHALL BE DONE IN ACCORDANCEOF THE LATEST APPROVED EDITION OF PHILIPPINE ELECTRICAL CODE WITH THE RULES AND REGULATIONS OF THE NATIONAL AND LOCAL AUTHORITIES CONCERNED IN THE ENFORCEMENT OF ELECTRICAL LAWS AND ORDINANCES AND WITH THE RULES AND REGULATIONS OF THE UTILITY COMPANIES CONCERNED.
2. ALL WORKS HEREIN SHALL BE DONE UNDER THE DIRECT SUPERVISION OF A DULY LICENSED ELECTRONICS AND COMMUNICATIONS ENGINEER.
3. ALL MATERIALS SHALL BE NEW, APPROVED FROM BOTH LOCATION AND PURPOSED INTENDED AND SHALL CONFORM TO THE INTERNATIONALLY ACCREDITED RECOGNIZED STANDARD, ON WHERE SUCH STANDARD HAS BEEN ESTABLISHED FOR PARTICULAR TYPES OF MATERIALS.
4. ALL AUXILIARY EQUIPMENT SHALL BE PROPERLY GROUNDED IN ACCORDANCE WITH THE REQUIREMENT OF THE PHILIPPINE ELECTRICAL CODE. GROUND RESISTANCE SHOULD NOT BE MORE THAN 2 OHMS. ADDITIONAL GROUND RODS SHALL BE PROVIDED IF GROUND RESISTANCE EXCEEDS 2 OHMS.
5. INSIDE DISTRIBUTION FRAMES IT SHALL HAVE SEPARATE GROUNDING BUSBARS.
6. FOR TELEPHONE COMMUNICATION SYSTEM USED 0.65MMø/8C CATEGORY 6 OR CATEGORY 5E WIRES DISTRIBUTION. TERMINAL SHALL BE QUICK–CONNECT TYPE.
7. MOUNTING HEIGHTS OF DEVICES SHALL BE AS APPROVED BY THE ARCHITECT AND/OR AS FOLLOWS (RJ–45 JACKS):
   TELECOM/DATA OUTLET_____300mm above finished floor to center of
   150m above working counter to center of device
8. MINIMUM SIZE FOR CONDUIT SHALL BE 15MM.DIA. STEEL CONDUIT OR 20mmø PVC MEASURED INSIDE OF THE CONDUIT ELECTRICAL TRADE SIZE. CONDUIT SHALL NOT BE BENDS NOT MORE THAN 3 TIMES, PROVIDE PULL BOX ON OR BEFORE FOUR QUARTER BENDS OF A CONDUIT IN ANY RUN. PULL BOX SHALL BE SIZE ACCORDING TO CODE REQUIREMENTS. CONTRACTOR MUST SUBMIT SHOP DRAWING FOR ENGINEER APPROVAL PRIOR TO FABRICATION.
9. CONDUIT SHALL BE SECURE AND PROTECTED BY ENTRANCE OF ANY FOREIGN OBJECT AND WATER DURING CONSTRUCTION STAGE. SPARE CONDUIT SHALL BE PROVIDED WITH PULLING WIRE. FOUR QUARTER BENDS OF A CONDUIT IN ANY RUN.
10. TELEPHONE TERMINAL CABINET (TTC) OR INTERMEDIATE DISTRIBUTION FRAME (IDF) SHALL SERVE TELEPHONE AND DATA OUTLET OR STATION WITH A MAXIMUM RANGE OF 90METERS.
11. COMMUNICATION SYSTEM WIRING, VOICE AND DATA SHALL BE SEPARATED FROM POWER WIRINGS. THIS IS TO PREVENT HUMMING AND ELECTROMAGNETIC INTERFERENCE (EMI) TO OR EXCEED THE EIA/TIA 568A CABLING STANDARD.
12. FOR OUTDOOR INSTALLATION USED CAST DEVICE BOXES AND FITTINGS.
13. UPON COMPLETION OF TELCO/AUXILIARY WORKS THE CONTRACTOR SHALL DO THE FOLLOWING DETAILED TESTING WITNESS BY THE OWNER OR BY OWNER REPRESENTATIVE.
    A. SIGNAL ATENUATION TEST
    B. CONTINUITY TEST
    C. NEAR–END CROSSTALK TEST
    D. IMPEDANCE TEST
    E. RESISTANCE TEST
    F. WIRE MAP TEST

LEGENDS (FDAS):	
S	ADDRESSABLE SMOKE DETECTOR
H	ADDRESSABLE HEAT DETECTOR
H	HORN AND STROBE LIGHT
F	MANUAL CALL POINT
	FIREMAN'S TELEPHONE JACK
M	FLOW SWITCH
M	TAMPER SWITCH
M	MONITOR MODULE
R	RELAY MODULE
FAPB	FA PULLBOX
FACP	FIRE ALARM CONTROL PANEL
UPS	UNINTERRUPTED POWER SUPPLY
ANN	GRAPHIC ANNUNCIATOR
BATT	SECONDARY BATTERY SUPPLY
EVAC	EMERGENCY VOICE ALARM COMMUNICATION
DACT	DIGITAL ALARM COMMUNICATOR TRANSMITTER
LEGENDS (PA BGM):	
	CEILING–MOUNTED LOUD SPEAKER, 6W
	WALL–MOUNTED LOUD SPEAKER
PABGM	PABGM PANEL
PAPB	PA PULLBOX
	MICROPHONE

LEGENDS (DAS):	
D	DOOR CONTACT WITH ALARM SOUNDER
DL	DOOR LOCK
B	PUSH BUTTON
CR	CARD READER
BG	BREAK GLASS (EMERGENCY EXIT)
DAS	DOOR ACCESS SYSTEM
LEGENDS (CCTV):	
	DOME–TYPE FIX CAMERA (PoE)
B	BULLET–TYPE FIX CAMERA (PoE)
NVR	NETWORK VIDEO RECORDER
CCTV	CCTV WORKSTATION
LEGENDS (VOICE/DATA):	
	VOICE OUTLET
	DATA OUTLET
	VOICE/DATA OUTLET
CCTV	DATA OUTLET FOR CCTV
MDF	MAIN DISTRIBUTION FRAME
MTTC	MAIN TELEPHONE TERMINAL CABINET
IDF	INTERMEDIATE DISTRIBUTION FRAME
TTC	TELEPHONE DISTRIBUTION CABINET
PABX	PRIVATE AUTOMATIC BRANCH EXCHANGE
xt	TELECOM CIRCUIT, X–DENOTES # OF 4 PAIR CAT6 UTP CABLE

a.c.ong CONSULTING INC.
Engineering + Management
ISO 9001:2015 Certified
2F LTA Building 118 Perea Street, Legaspi Village, 1229 Makati City, Philippines
Tel. Nos.: +63 2 8935827 Fax No.: +63 2 8935829
Email: acoconsulting@aco.com.ph Website: www.aco.com.ph

CERTIFIED BY: RONALD B. NAVARRO, PROFESSIONAL ELECTRONICS ENGINEER
REG. NO.: 1020
TIN NO. : 303–246–245
PTR NO. : 6614942
DATE : JANUARY 04, 2018
PLACE : MAKATI CITY

OWNER: METROPOLITAN WATERWORKS AND SEWERAGE SYSTEM REGULATORY OFFICE
MWSS COMPOUND, KATIPUNAN AVENUE, MATANDANG BALARA, QUEZON CITY

PROJECT TITLE/LOCATION: 3-STOREY OFFICE BUILDING WITH ROOF DECK
MWSS COMPOUND, KATIPUNAN AVENUE, MATANDANG BALARA, QUEZON CITY

CLIENT
PROJECT PROPONENT: MELCHOR S. CORDOVA, ALTERNATE END–USER FOR RO BUILDING
APPROVED BY: PATRICK LESTER N. TY, CHIEF REGULATOR, MWSS RO

SHEET CONTENTS: DRAWING INDEX, GENERAL NOTES, LEGENDS & SYMBOLS

R.A. 9266 SEC. 33
DRAWINGS AND SPECIFICATIONS AND CONTRACT DOCUMENTS DULY SIGNED, STAMPED OR SEALED AS INSTRUMENTS FOR SERVICE ARE THE INTELLECTUAL PROPERTY AND DOCUMENTS OF ARCHITECT, WHETHER THE OBJECT FOR WHICH THEY ARE MADE IS EXECUTED OR NOT. IT SHALL BE UNLAWFUL FOR ANY PERSON TO DUPLICATE OR TO MAKE COPIES OF SAID DOCUMENTS FOR USE IN THE REPETITION OF AND FOR OTHER PROJECTS OR BUILDINGS, WHETHER EXECUTED PARTLY OR IN WHOLE, WITHOUT THE WRITTEN CONSENT OF THE ARCHITECT OR AUTHOR OF SAID DOCUMENTS.

CADD	DATE	NO.	REVISIONS	CHK	DATE
AVL	JUL 2018				
DESIGNED	DATE				
RRVP	JUL 2018				
APPROVED	DATE				
RBN	JUL 2018				

PAPER SIZE	SHEET NO.
20X30	EA-0101
SCALE	PROJECT NO.
AS SHOWN	SO-G-17-036

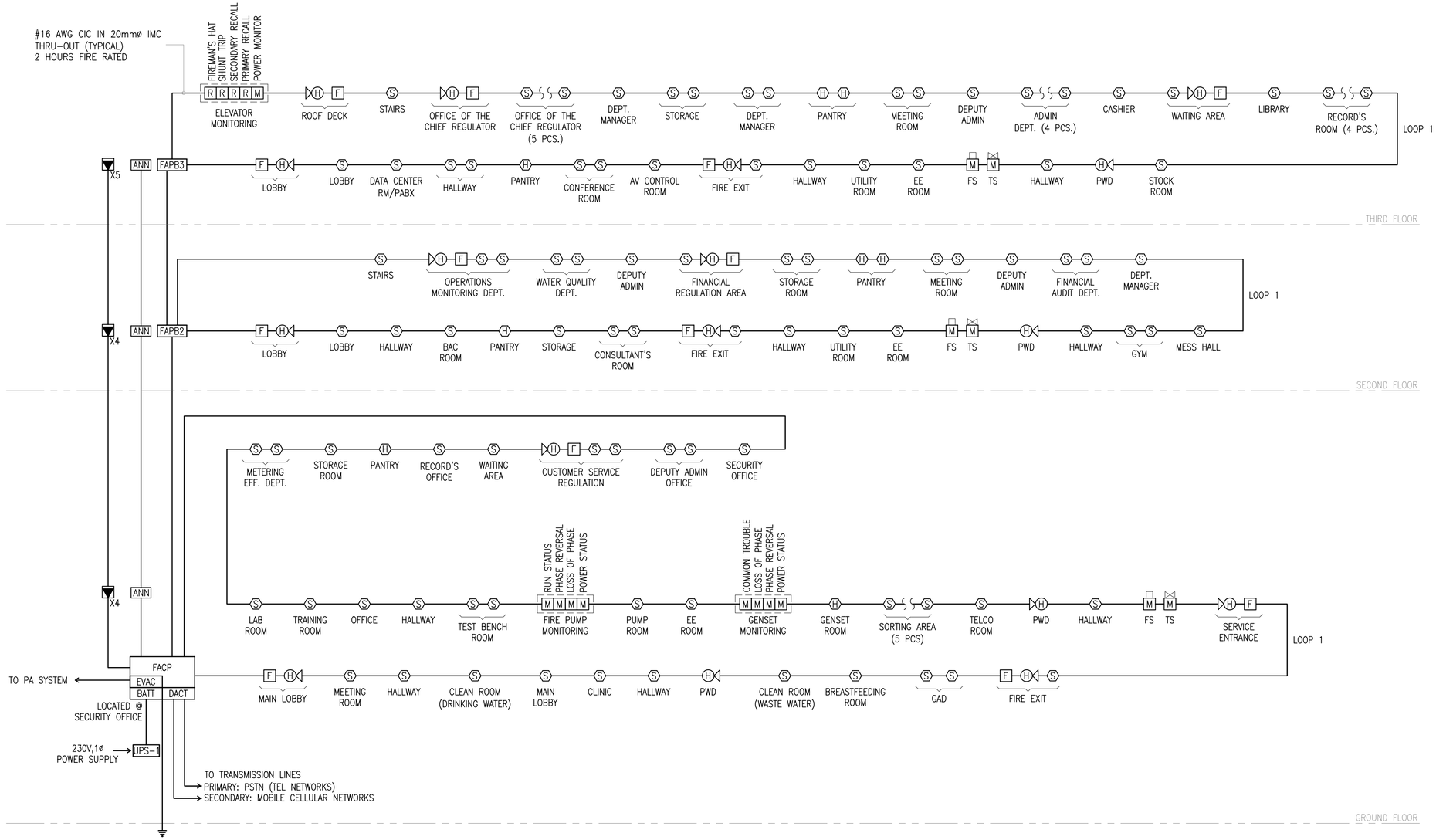

I
EA-0201

FDAS RISER DIAGRAM

SCALE NTS

ELEVATOR MONITORING	
M	POWER STATUS
R	PRIMARY RECALL
R	SECONDARY RECALL
R	SHUNT TRIP
R	FIREMAN'S HAT

GENSET MONITORING	
M	COMMON TROUBLE
M	LOSS OF PHASE
M	LOW FUEL
M	RUN STATUS

FIRE PUMP MONITORING	
M	RUN STATUS
M	PHASE REVERSAL
M	LOSS OF PHASE
M	POWER STATUS

a.c.ong CONSULTING INC.
Engineering + Management
ISO 9001:2015 Certified
2F LTA Building 118 Perea Street, Legaspi Village, 1229 Makati City, Philippines
Tel. Nos.: +63 2 8935827 Fax No.: +63 2 8935829
Email: acoconsulting@aco.com.ph Website: www.aco.com.ph

CERTIFIED BY: RONALD B. NAVARRO, PROFESSIONAL ELECTRONICS ENGINEER
REG. NO.: 1020
TIN NO. : 303-246-245
PTR NO. : 6614942
DATE : JANUARY 04, 2018
PLACE : MAKATI CITY

OWNER: METROPOLITAN WATERWORKS AND SEWERAGE SYSTEM REGULATORY OFFICE
MWSS COMPOUND, KATIPUNAN AVENUE, MATANDANG BALARA, QUEZON CITY

PROJECT TITLE/LOCATION: 3-STOREY OFFICE BUILDING WITH ROOF DECK
MWSS COMPOUND, KATIPUNAN AVENUE, MATANDANG BALARA, QUEZON CITY

CLIENT
PROJECT PROPONENT: MELCHOR S. CORDOVA, ALTERNATE END-USER FOR RO BUILDING
APPROVED BY: PATRICK LESTER N. TY, CHIEF REGULATOR, MWSS RO

SHEET CONTENTS: FDAS RISER DIAGRAM

R.A. 9266 SEC. 33
DRAWINGS AND SPECIFICATIONS AND CONTRACT DOCUMENTS DULY SIGNED, STAMPED OR SEALED AS INSTRUMENTS FOR SERVICE ARE THE INTELLECTUAL PROPERTY AND DOCUMENTS OF ARCHITECT, WHETHER THE OBJECT FOR WHICH THEY ARE MADE IS EXECUTED OR NOT. IT SHALL BE UNLAWFUL FOR ANY PERSON TO DUPLICATE OR TO MAKE COPIES OF SAID DOCUMENTS FOR USE IN THE REPETITION OF AND FOR OTHER PROJECTS OR BUILDINGS, WHETHER EXECUTED PARTLY OR IN WHOLE, WITHOUT THE WRITTEN CONSENT OF THE ARCHITECT OR AUTHOR OF SAID DOCUMENTS.

CADD	DATE	NO.	REVISIONS	CHK	DATE	PAPER SIZE	SHEET NO.
AVL	JUL 2018					20X30	EA-0201
DESIGNED	DATE					SCALE	PROJECT NO.
RRVP	JUL 2018					AS SHOWN	SO-G-17-036
APPROVED	DATE						
RBN	JUL 2018						

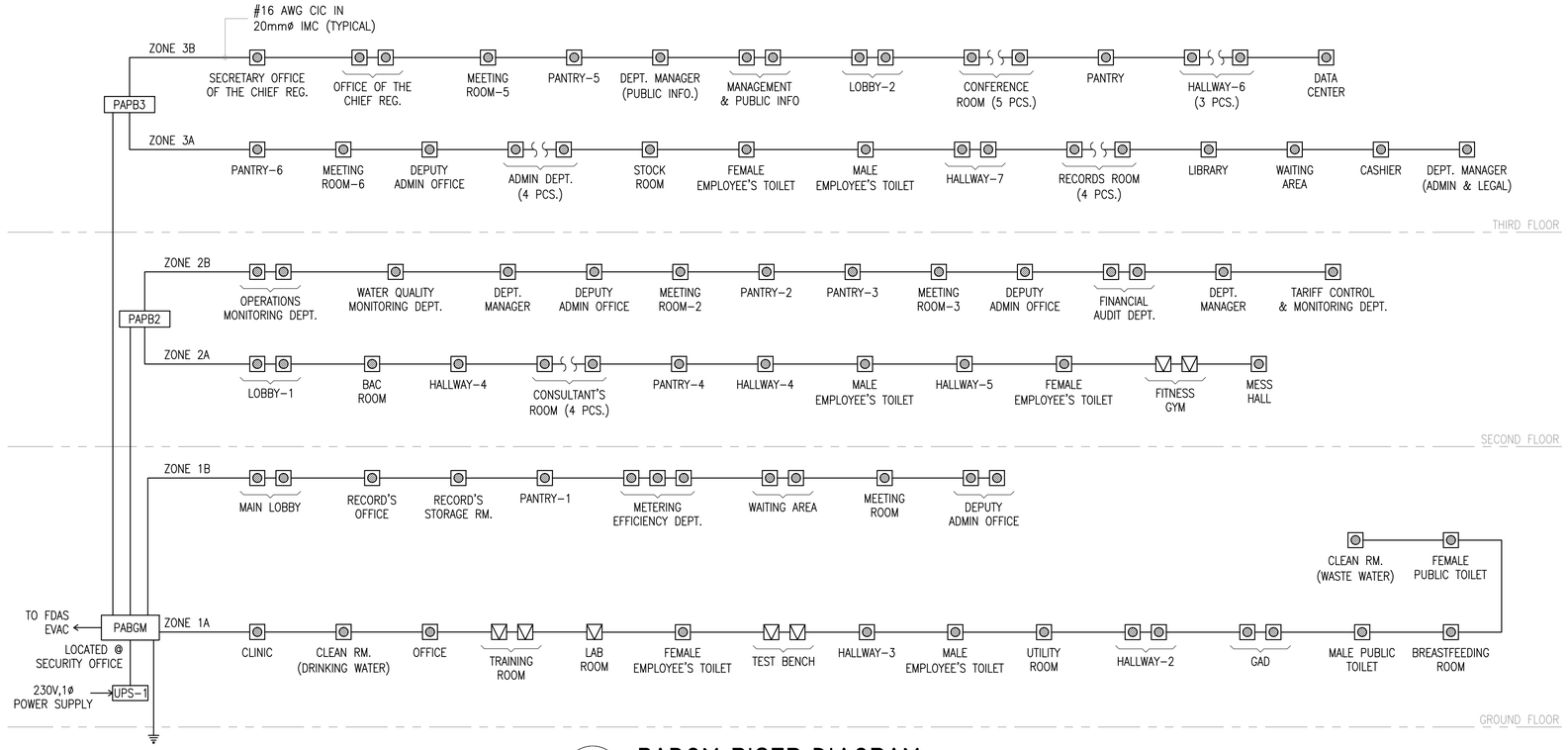

1 PABGM RISER DIAGRAM

EA-0202 SCALE NTS

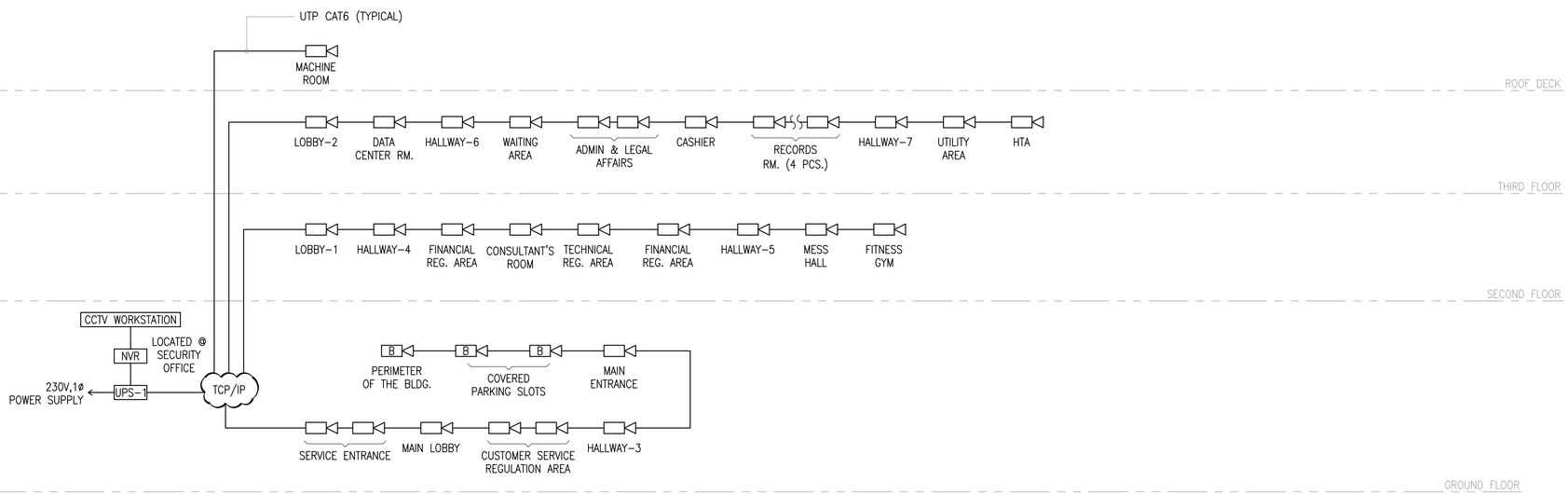

NOTE:
1. 'x't – x DENOTES NP. OF 4PR CAT6 UTP CABLE

CONDUIT SIZE (mm)	20	25	32	40	50
4PR CAT6 UTP CABLE	3	6	8	13	21

2 CCTV RISER DIAGRAM

EA-0202 SCALE NTS

a.c.ong CONSULTING INC.
Engineering + Management
ISO 9001:2015 Certified
2F LTA Building 118 Perea Street, Legaspi Village, 1229 Makati City, Philippines
Tel. Nos.: +63 2 8935827 Fax No.: +63 2 8935829
Email: acoconsulting@aco.com.ph Website: www.aco.com.ph

CERTIFIED BY: RONALD B. NAVARRO, PROFESSIONAL ELECTRONICS ENGINEER
REG. NO.: 1020
TIN NO. : 303-246-245
PTR NO. : 6614942
DATE : JANUARY 04, 2018
PLACE : MAKATI CITY

OWNER: METROPOLITAN WATERWORKS AND SEWERAGE SYSTEM REGULATORY OFFICE
MWSS COMPOUND, KATIPUNAN AVENUE, MATANDANG BALARA, QUEZON CITY

PROJECT TITLE/LOCATION: 3-STOREY OFFICE BUILDING WITH ROOF DECK
MWSS COMPOUND, KATIPUNAN AVENUE, MATANDANG BALARA, QUEZON CITY

CLIENT
PROJECT PROPONENT: MELCHOR S. CORDOVA, ALTERNATE END-USER FOR RO BUILDING
APPROVED BY: PATRICK LESTER N. TY, CHIEF REGULATOR, MWSS RO

SHEET CONTENTS: PABGM RISER DIAGRAM, CCTV RISER DIAGRAM

R.A. 9266 SEC. 33
DRAWINGS AND SPECIFICATIONS AND CONTRACT DOCUMENTS DULY SIGNED, STAMPED OR SEALED AS INSTRUMENTS FOR SERVICE ARE THE INTELLECTUAL PROPERTY AND DOCUMENTS OF ARCHITECT, WHETHER THE OBJECT FOR WHICH THEY ARE MADE IS EXECUTED OR NOT, IT SHALL BE UNLAWFUL FOR ANY PERSON TO DUPLICATE OR TO MAKE COPIES OF SAID DOCUMENTS FOR USE IN THE REPETITION OF AND FOR OTHER PROJECTS OR BUILDINGS, WHETHER EXECUTED PARTLY OR IN WHOLE, WITHOUT THE WRITTEN CONSENT OF THE ARCHITECT OR AUTHOR OF SAID DOCUMENTS.

CADD	DATE	NO.	REVISIONS	CHK	DATE	PAPER SIZE	SHEET NO.
AVL	JUL 2018					20X30	EA-0202
DESIGNED	DATE					SCALE	PROJECT NO.
RRVP	JUL 2018					AS SHOWN	SO-G-17-036
APPROVED	DATE						
RBN	JUL 2018						

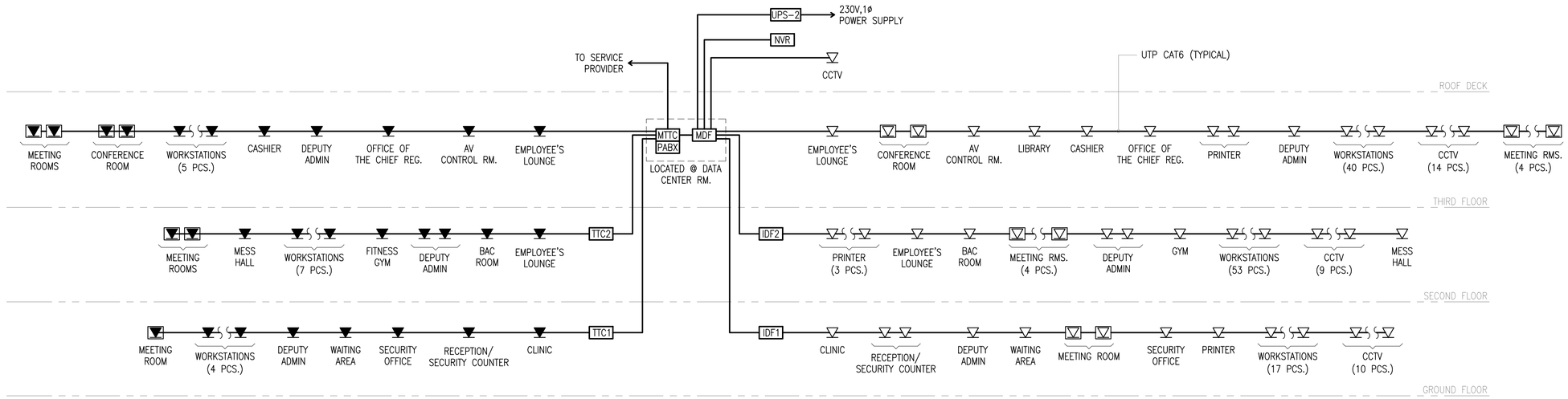

1 TEL/DATA RISER DIAGRAM

EA-0203 SCALE NTS

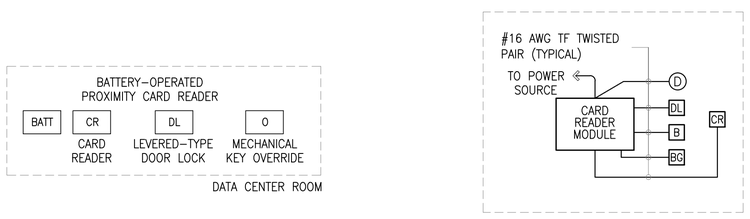

2 DOOR ACCESS SYSTEM

EA-0203 SCALE NTS

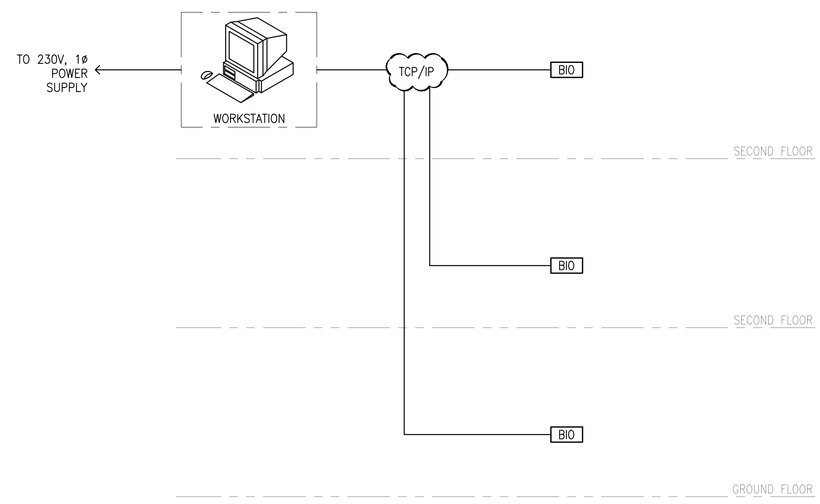

3 BIOMETRICS RISER DIAGRAM

EA-0203 SCALE NTS

a.c.ong CONSULTING INC.
Engineering + Management
ISO 9001:2015 Certified
2F LTA Building 118 Perea Street, Legaspi Village, 1229 Makati City, Philippines
Tel. Nos.: +63 2 8935827 Fax No.: +63 2 8935829
Email: acoconsulting@aco.com.ph Website: www.aco.com.ph

CERTIFIED BY		OWNER	PROJECT TITLE/LOCATION	CLIENT		SHEET CONTENTS
RONALD B. NAVARRO PROFESSIONAL ELECTRONICS ENGINEER	REG. NO.: 1020 TIN NO. : 303-246-245 PTR NO. : 6614942 DATE : JANUARY 04, 2018 PLACE : MAKATI CITY	METROPOLITAN WATERWORKS AND SEWERAGE SYSTEM REGULATORY OFFICE MWSS COMPOUND, KATIPUNAN AVENUE, MATANDANG BALARA, QUEZON CITY	3-STOREY OFFICE BUILDING WITH ROOF DECK MWSS COMPOUND, KATIPUNAN AVENUE, MATANDANG BALARA, QUEZON CITY	PROJECT PROPONENT MELCHOR S. CORDOVA ALTERNATE END-USER FOR RO BUILDING	APPROVED BY: PATRICK LESTER N. TY CHIEF REGULATOR, MWSS RO	TEL/DATA RISER DIAGRAM ACCESS CONTROL (ACS) RISER DIAGRAM

R.A. 9266 SEC. 33
DRAWINGS AND SPECIFICATIONS AND CONTRACT DOCUMENTS DULY SIGNED, STAMPED OR SEALED AS INSTRUMENTS FOR SERVICE ARE THE INTELLECTUAL PROPERTY AND DOCUMENTS OF ARCHITECT, WHETHER THE OBJECT FOR WHICH THEY ARE MADE IS EXECUTED OR NOT. IT SHALL BE UNLAWFUL FOR ANY PERSON TO DUPLICATE OR TO MAKE COPIES OF SAID DOCUMENTS FOR USE IN THE REPETITION OF AND FOR OTHER PROJECTS OR BUILDINGS, WHETHER EXECUTED PARTLY OR IN WHOLE, WITHOUT THE WRITTEN CONSENT OF THE ARCHITECT OR AUTHOR OF SAID DOCUMENTS.

CADD	DATE	NO.	REVISIONS	CHK	DATE	PAPER SIZE	SHEET NO.
AVL	JUL 2018					20X30	EA-0203
DESIGNED	DATE					SCALE	PROJECT NO.
RRVP	JUL 2018					AS SHOWN	SO-G-17-036
APPROVED	DATE						
RBN	JUL 2018						

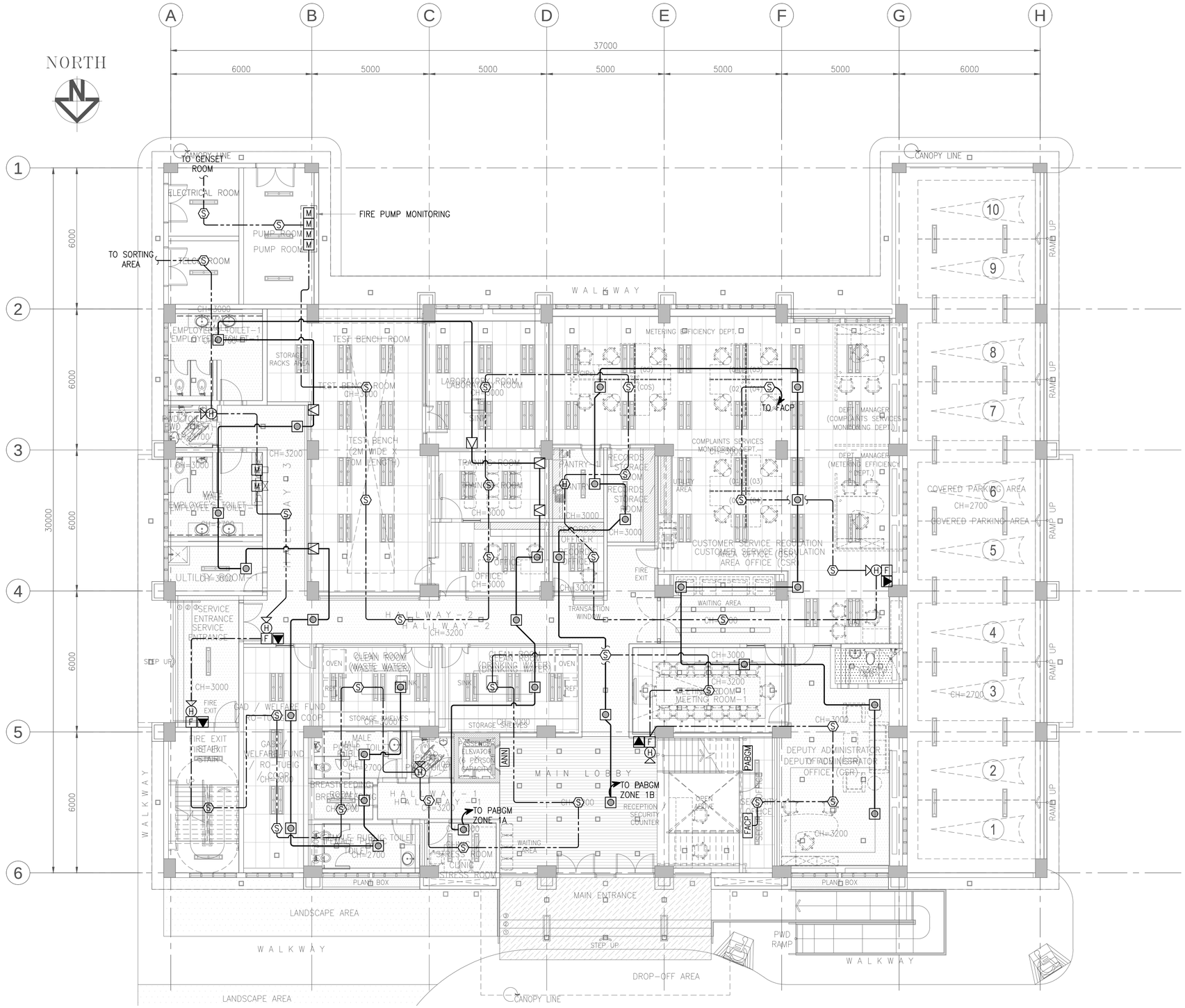

GROUND FLOOR FDAS & PA/BGM LAYOUT

I
EA-0301

SCALE 1:100M

a.c.ONG CONSULTING INC. Engineering + Management ISO 9001:2015 Certified 2F LTA Building 118 Perea Street, Legaspi Village, 1229 Makati City, Philippines Tel. Nos.: +63 2 8935827 Fax No.: +63 2 8935829 Email: acoconsulting@aco.com.ph Website: www.aco.com.ph	CERTIFIED BY RONALD B. NAVARRO PROFESSIONAL ELECTRONICS ENGINEER	REG. NO.: 1020 TIN NO. : 303-246-245 PTR NO. : 6614942 DATE : JANUARY 04, 2018 PLACE : MAKATI CITY	OWNER METROPOLITAN WATERWORKS AND SEWERAGE SYSTEM REGULATORY OFFICE MWSS COMPOUND, KATIPUNAN AVENUE, MATANDANG BALARA, QUEZON CITY	PROJECT TITLE/LOCATION 3-STOREY OFFICE BUILDING WITH ROOF DECK MWSS COMPOUND, KATIPUNAN AVENUE, MATANDANG BALARA, QUEZON CITY	CLIENT PROJECT PROPONENT MELCHOR S. CORDOVA ALTERNATE END-USER FOR RO BUILDING	APPROVED BY: PATRICK LESTER N. TY CHIEF REGULATOR, MWSS RO	SHEET CONTENTS GROUND FLOOR FDAS & PA/BGM LAYOUT	R.A. 9266 SEC. 33 DRAWINGS AND SPECIFICATIONS AND CONTRACT DOCUMENTS DULY SIGNED, STAMPED OR SEALED AS INSTRUMENTS FOR SERVICE ARE THE INTELLECTUAL PROPERTY AND DOCUMENTS OF ARCHITECT, WHETHER THE OBJECT FOR WHICH THEY ARE MADE IS EXECUTED OR NOT. IT SHALL BE UNLAWFUL FOR ANY PERSON TO DUPLICATE OR TO MAKE COPIES OF SAID DOCUMENTS FOR USE IN THE REPETITION OF AND FOR OTHER PROJECTS OR BUILDINGS, WHETHER EXECUTED PARTLY OR IN WHOLE, WITHOUT THE WRITTEN CONSENT OF THE ARCHITECT OR AUTHOR OF SAID DOCUMENTS.	CADD AVL DESIGNED RRVP APPROVED RBN	DATE JUL 2018 DATE JUL 2018 DATE JUL 2018	NO.	REVISIONS	CHK	DATE	PAPER SIZE 20X30 SCALE AS SHOWN	SHEET NO. EA-0301 PROJECT NO. SO-G-17-036

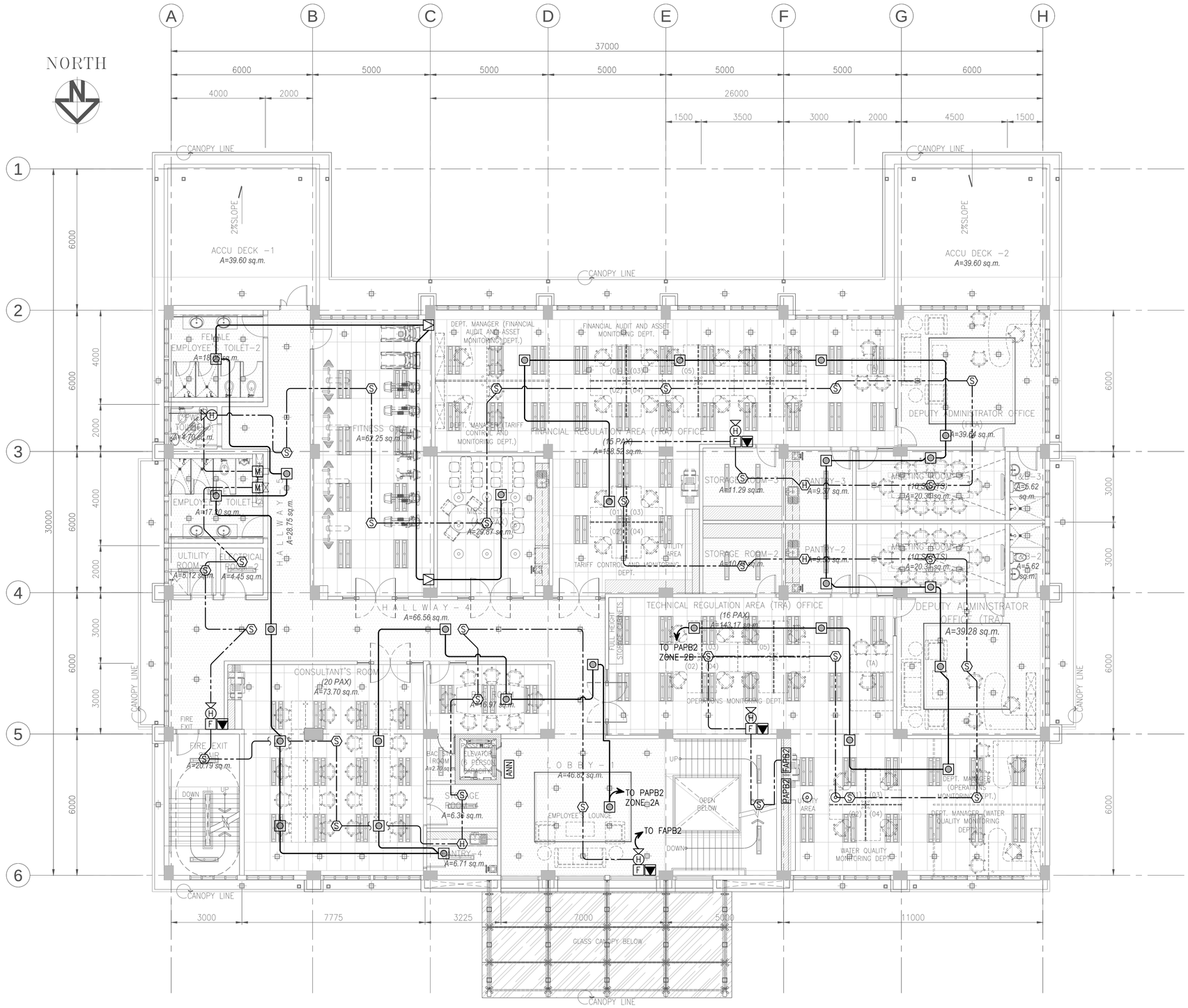

I
EA–0302

SECOND FLOOR FDAS & PA/BGM LAYOUT

SCALE 1:100M

a.c.ONG CONSULTING INC.
Engineering + Management
ISO 9001:2015 Certified
2F LTA Building 118 Perea Street, Legaspi Village, 1229 Makati City, Philippines
Tel. Nos.: +63 2 8935827 Fax No.: +63 2 8935829
Email: acoconsulting@aco.com.ph Website: www.aco.com.ph

CERTIFIED BY
RONALD B. NAVARRO
PROFESSIONAL ELECTRONICS ENGINEER
REG. NO.: 1020
TIN NO. : 303–246–245
PTR NO. : 6614942
DATE : JANUARY 04, 2018
PLACE : MAKATI CITY

OWNER: METROPOLITAN WATERWORKS AND SEWERAGE SYSTEM REGULATORY OFFICE
MWSS COMPOUND, KATIPUNAN AVENUE, MATANDANG BALARA, QUEZON CITY

PROJECT TITLE/LOCATION: 3-STOREY OFFICE BUILDING WITH ROOF DECK
MWSS COMPOUND, KATIPUNAN AVENUE, MATANDANG BALARA, QUEZON CITY

CLIENT
PROJECT PROPONENT: MELCHOR S. CORDOVA, ALTERNATE END–USER FOR RO BUILDING
APPROVED BY: PATRICK LESTER N. TY, CHIEF REGULATOR, MWSS RO

SHEET CONTENTS: SECOND FLOOR FDAS & PA/BGM LAYOUT

R.A. 9266 SEC. 33
DRAWINGS AND SPECIFICATIONS AND CONTRACT DOCUMENTS DULY SIGNED, STAMPED OR SEALED AS INSTRUMENTS FOR SERVICE ARE THE INTELLECTUAL PROPERTY AND DOCUMENTS OF ARCHITECT, WHETHER THE OBJECT FOR WHICH THEY ARE MADE IS EXECUTED OR NOT; IT SHALL BE UNLAWFUL FOR ANY PERSON TO DUPLICATE OR TO MAKE COPIES OF SAID DOCUMENTS FOR USE IN THE REPETITION OF AND FOR OTHER PROJECTS OR BUILDINGS, WHETHER EXECUTED PARTLY OR IN WHOLE, WITHOUT THE WRITTEN CONSENT OF THE ARCHITECT OR AUTHOR OF SAID DOCUMENTS.

CADD	DATE	NO.	REVISIONS	CHK	DATE	PAPER SIZE	SHEET NO.
AVL	JUL 2018					20X30	EA-0302
DESIGNED	DATE					SCALE	PROJECT NO.
RRVP	JUL 2018					AS SHOWN	SO-G-17-036
APPROVED	DATE						
RBN	JUL 2018						

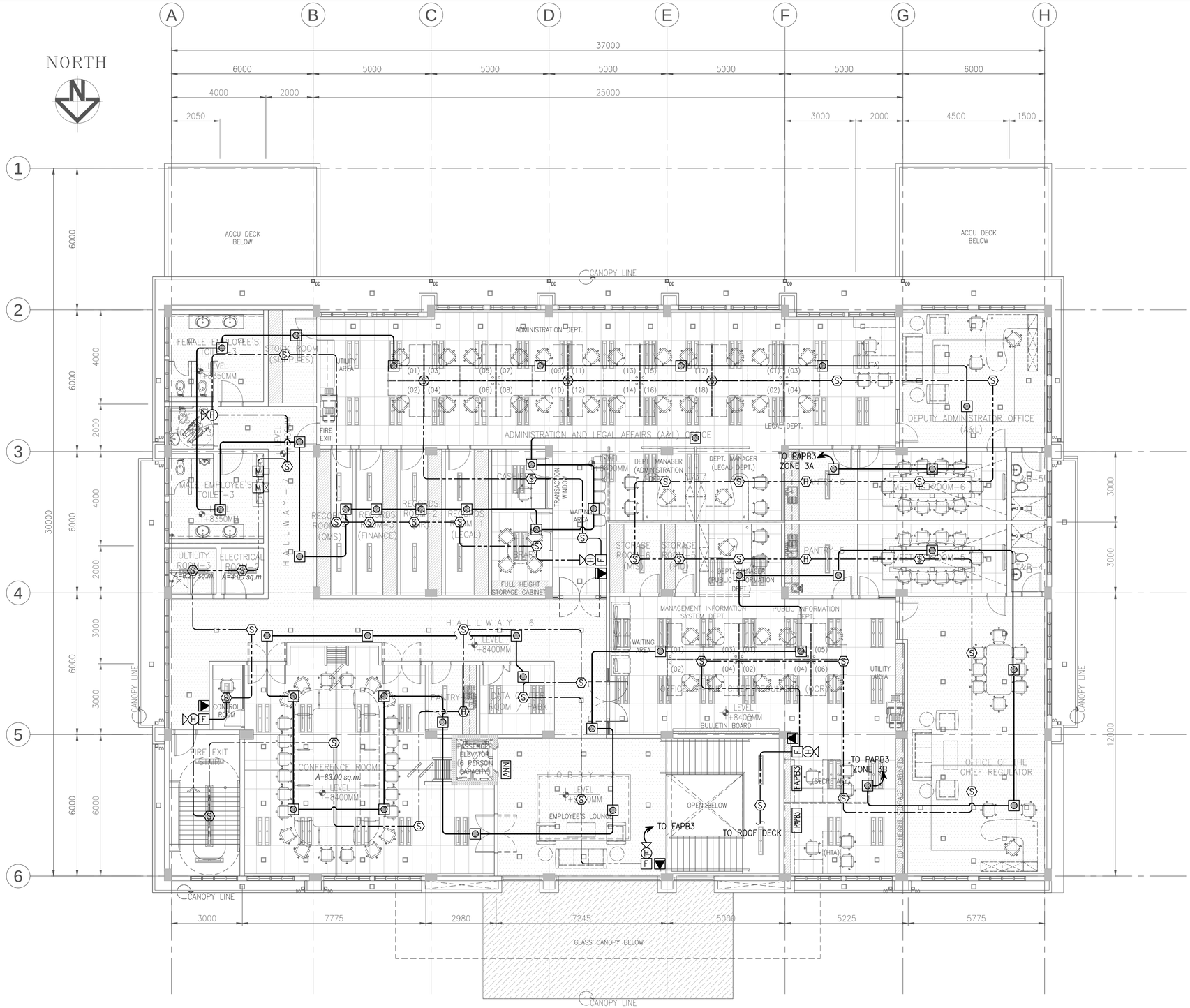

THIRD FLOOR FDAS & PA/BGM LAYOUT

1 / EA-0303

SCALE 1:100M

a.C.ONG CONSULTING INC. Engineering + Management ISO 9001:2015 Certified	CERTIFIED BY	OWNER	PROJECT TITLE/LOCATION	CLIENT		SHEET CONTENTS	R.A. 9266 SEC. 33	CADD	DATE	NO.	REVISIONS	CHK	DATE	PAPER SIZE / SHEET NO.
2F LTA Building 118 Perea Street, Legazpi Village, 1229 Makati City, Philippines Tel. Nos.: +63 2 8935827 Fax No.: +63 2 8935829 Email: acoconsulting@aco.com.ph Website: www.aco.com.ph	RONALD B. NAVARRO, PROFESSIONAL ELECTRONICS ENGINEER	METROPOLITAN WATERWORKS AND SEWERAGE SYSTEM REGULATORY OFFICE, MWSS COMPOUND, KATIPUNAN AVENUE, MATANDANG BALARA, QUEZON CITY	3-STOREY OFFICE BUILDING WITH ROOF DECK, MWSS COMPOUND, KATIPUNAN AVENUE, MATANDANG BALARA, QUEZON CITY	PROJECT PROPONENT: MELCHOR S. CORDOVA, ALTERNATE END-USER FOR RO BUILDING	APPROVED BY: PATRICK LESTER N. TY, CHIEF REGULATOR, MWSS RO	THIRD FLOOR FDAS & PA/BGM LAYOUT	DRAWINGS AND SPECIFICATIONS AND CONTRACT DOCUMENTS DULY SIGNED, STAMPED OR SEALED AS INSTRUMENTS FOR SERVICE ARE THE INTELLECTUAL PROPERTY AND DOCUMENTS OF ARCHITECT, WHETHER THE OBJECT FOR WHICH THEY ARE MADE IS EXECUTED OR NOT. IT SHALL BE UNLAWFUL FOR ANY PERSON TO DUPLICATE OR TO MAKE COPIES OF SAID DOCUMENTS FOR USE IN THE REPETITION OF AND FOR OTHER PROJECTS OR BUILDINGS, WHETHER EXECUTED PARTLY OR IN WHOLE, WITHOUT THE WRITTEN CONSENT OF THE ARCHITECT OR AUTHOR OF SAID DOCUMENTS.	AVL	JUL 2018					20X30	EA-0303
	REG. NO.: 1020							DESIGNED	DATE					SCALE	PROJECT NO.
	TIN NO. : 303-246-245							RRVP	JUL 2018					AS SHOWN	SO-G-17-036
	PTR NO. : 6614942							APPROVED	DATE						
	DATE : JANUARY 04, 2018							RBN	JUL 2018						
	PLACE : MAKATI CITY														

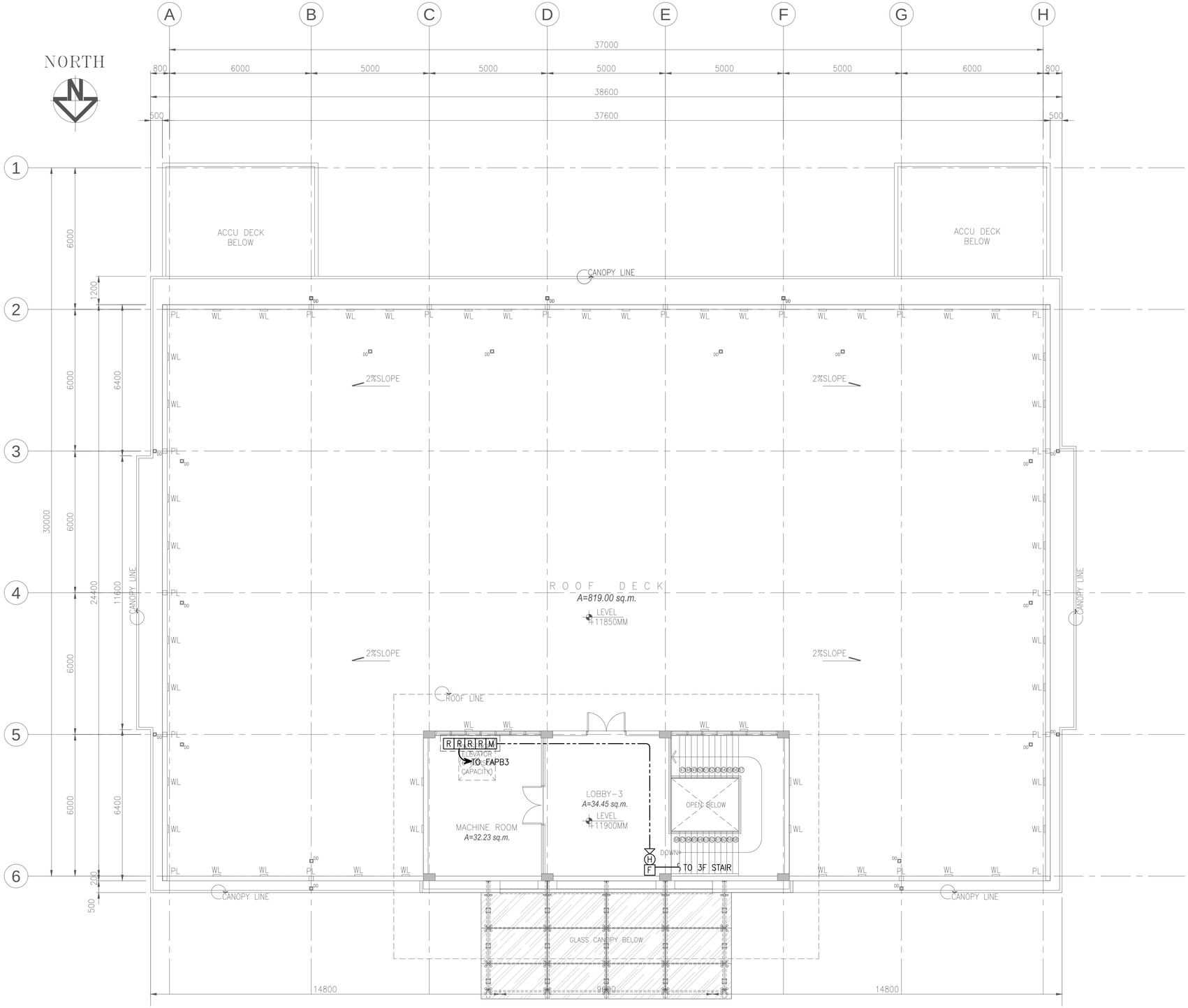

I
EA-0304

ROOF DECK FDAS LAYOUT

SCALE 1:100M

a.c.ong CONSULTING INC.
Engineering + Management
ISO 9001:2015 Certified
2F LTA Building 118 Perea Street, Legaspi Village, 1229 Makati City, Philippines
Tel. Nos.: +63 2 8935827 Fax No.: +63 2 8935829
Email: acoconsulting@aco.com.ph Website: www.aco.com.ph

CERTIFIED BY

RONALD B. NAVARRO
PROFESSIONAL ELECTRONICS ENGINEER

REG. NO.: 1020
TIN NO. : 303-246-245
PTR NO. : 6614942
DATE : JANUARY 04, 2018
PLACE : MAKATI CITY

OWNER: METROPOLITAN WATERWORKS AND SEWERAGE SYSTEM REGULATORY OFFICE
MWSS COMPOUND, KATIPUNAN AVENUE, MATANDANG BALARA, QUEZON CITY

PROJECT TITLE/LOCATION: 3-STOREY OFFICE BUILDING WITH ROOF DECK
MWSS COMPOUND, KATIPUNAN AVENUE, MATANDANG BALARA, QUEZON CITY

CLIENT
PROJECT PROPONENT: MELCHOR S. CORDOVA, ALTERNATE END-USER FOR RO BUILDING
APPROVED BY: PATRICK LESTER N. TY, CHIEF REGULATOR, MWSS RO

SHEET CONTENTS: ROOF DECK FDAS LAYOUT

R.A. 9266 SEC. 33
DRAWINGS AND SPECIFICATIONS AND CONTRACT DOCUMENTS DULY SIGNED, STAMPED OR SEALED AS INSTRUMENTS FOR SERVICE ARE THE INTELLECTUAL PROPERTY AND DOCUMENTS OF ARCHITECT, WHETHER THE OBJECT FOR WHICH THEY ARE MADE IS EXECUTED OR NOT. IT SHALL BE UNLAWFUL FOR ANY PERSON TO DUPLICATE OR TO MAKE COPIES OF SAID DOCUMENTS FOR USE IN THE REPETITION OF AND FOR OTHER PROJECTS OR BUILDINGS, WHETHER EXECUTED PARTLY OR IN WHOLE, WITHOUT THE WRITTEN CONSENT OF THE ARCHITECT OR AUTHOR OF SAID DOCUMENTS.

CADD	DATE	NO.	REVISIONS	CHK	DATE	PAPER SIZE	SHEET NO.
AVL	JUL 2018					20X30	EA-0304
DESIGNED	DATE					SCALE	PROJECT NO.
RRVP	JUL 2018					AS SHOWN	SO-G-17-036
APPROVED	DATE						
RBN	JUL 2018						

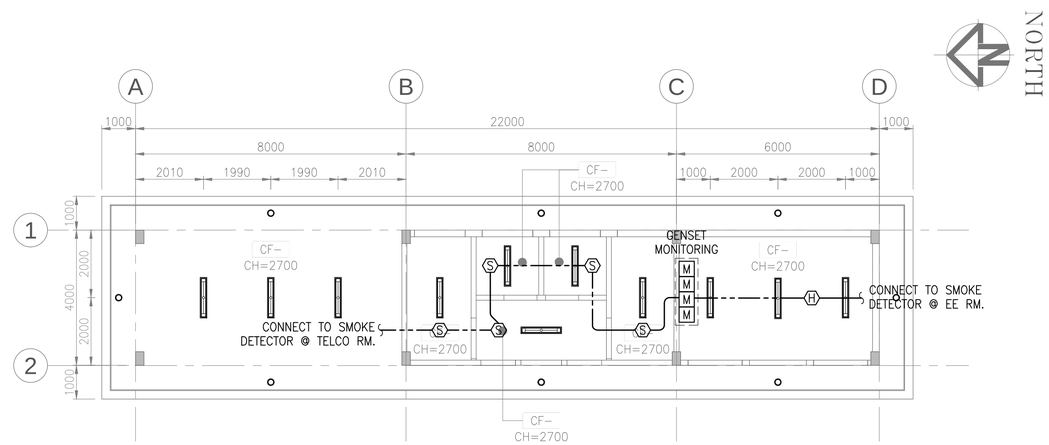

I
EA–0305

AUXILIARY BUILDING FDAS LAYOUT

SCALE 1:100M

a.C.ONG CONSULTING INC.
Engineering + Management
ISO 9001:2015 Certified
2F LTA Building 118 Perea Street, Legaspi Village, 1229 Makati City, Philippines
Tel. Nos.: +63 2 8935827 Fax No.: +63 2 8935829
Email: acoconsulting@aco.com.ph Website: www.aco.com.ph

CERTIFIED BY
RONALD B. NAVARRO
PROFESSIONAL ELECTRONICS ENGINEER
REG. NO.: 1020
TIN NO. : 303–246–245
PTR NO. : 6614942
DATE : JANUARY 04, 2018
PLACE : MAKATI CITY

OWNER
METROPOLITAN WATERWORKS AND SEWERAGE SYSTEM REGULATORY OFFICE
MWSS COMPOUND, KATIPUNAN AVENUE, MATANDANG BALARA, QUEZON CITY

PROJECT TITLE/LOCATION
3-STOREY OFFICE BUILDING WITH ROOF DECK
MWSS COMPOUND, KATIPUNAN AVENUE, MATANDANG BALARA, QUEZON CITY

CLIENT
PROJECT PROPONENT
MELCHOR S. CORDOVA
ALTERNATE END–USER FOR RO BUILDING
APPROVED BY:
PATRICK LESTER N. TY
CHIEF REGULATOR, MWSS RO

SHEET CONTENTS
AUXILIARY BUILDING FDAS LAYOUT

R.A. 9266 SEC. 33
DRAWINGS AND SPECIFICATIONS AND CONTRACT DOCUMENTS DULY SIGNED, STAMPED OR SEALED AS INSTRUMENTS FOR SERVICE ARE THE INTELLECTUAL PROPERTY AND DOCUMENTS OF ARCHITECT, WHETHER THE OBJECT FOR WHICH THEY ARE MADE IS EXECUTED OR NOT. IT SHALL BE UNLAWFUL FOR ANY PERSON TO DUPLICATE OR TO MAKE COPIES OF SAID DOCUMENTS FOR USE IN THE REPETITION OF AND FOR OTHER PROJECTS OR BUILDINGS, WHETHER EXECUTED PARTLY OR IN WHOLE, WITHOUT THE WRITTEN CONSENT OF THE ARCHITECT OR AUTHOR OF SAID DOCUMENTS.

CADD	DATE	NO.	REVISIONS	CHK	DATE
AVL	JUL 2018				
DESIGNED	DATE				
RRVP	JUL 2018				
APPROVED	DATE				
RBN	JUL 2018				

PAPER SIZE	SHEET NO.
20X30	EA-0305
SCALE	PROJECT NO.
AS SHOWN	SO-G-17-036

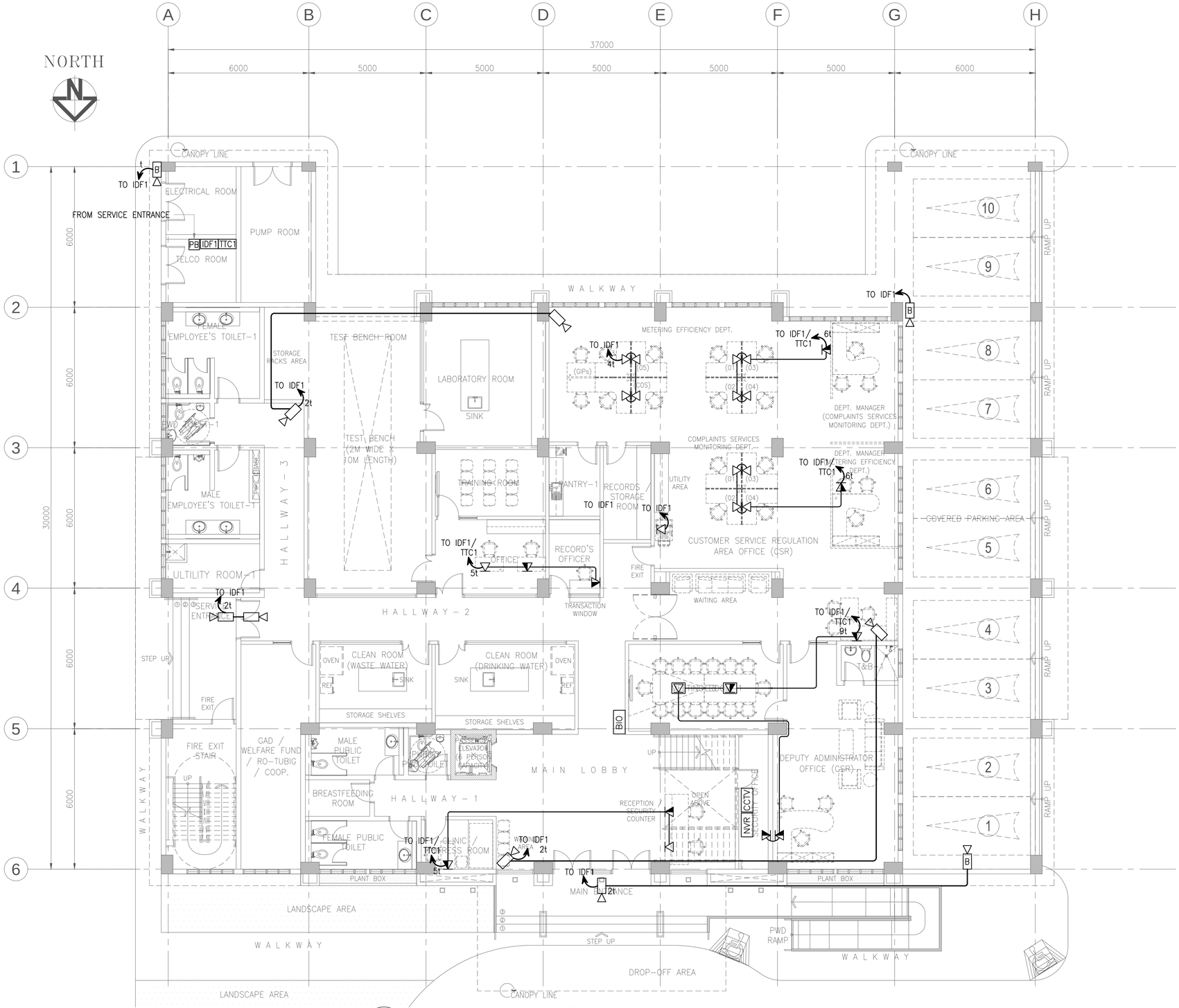

I GROUND FLOOR TEL/DATA & CCTV LAYOUT

EA-0501 SCALE 1:100M

a.c.ong CONSULTING INC. Engineering + Management ISO 9001:2015 Certified 2F LTA Building 118 Perea Street, Legaspi Village, 1229 Makati City, Philippines Tel. Nos.: +63 2 8935827 Fax No.: +63 2 8935829 Email: acoconsulting@aco.com.ph Website: www.aco.com.ph	CERTIFIED BY RONALD B. NAVARRO PROFESSIONAL ELECTRONICS ENGINEER	REG. NO.: 1020 TIN NO. : 303-246-245 PTR NO. : 6614942 DATE : JANUARY 04, 2018 PLACE : MAKATI CITY	OWNER METROPOLITAN WATERWORKS AND SEWERAGE SYSTEM REGULATORY OFFICE MWSS COMPOUND, KATIPUNAN AVENUE, MATANDANG BALARA, QUEZON CITY	PROJECT TITLE/LOCATION 3-STOREY OFFICE BUILDING WITH ROOF DECK MWSS COMPOUND, KATIPUNAN AVENUE, MATANDANG BALARA, QUEZON CITY	CLIENT PROJECT PROPONENT MELCHOR S. CORDOVA ALTERNATE END-USER FOR RO BUILDING	APPROVED BY: PATRICK LESTER N. TY CHIEF REGULATOR, MWSS RO	SHEET CONTENTS GROUND FLOOR TEL/DATA & CCTV LAYOUT	R.A. 9266 SEC. 33 DRAWINGS AND SPECIFICATIONS AND CONTRACT DOCUMENTS DULY SIGNED, STAMPED OR SEALED AS INSTRUMENTS FOR SERVICE ARE THE INTELLECTUAL PROPERTY AND DOCUMENTS OF ARCHITECT, WHETHER THE OBJECT FOR WHICH THEY ARE MADE IS EXECUTED OR NOT; IT SHALL BE UNLAWFUL FOR ANY PERSON TO DUPLICATE OR TO MAKE COPIES OF SAID DOCUMENTS FOR USE IN THE REPETITION OF AND FOR OTHER PROJECTS OR BUILDINGS, WHETHER EXECUTED PARTLY OR IN WHOLE, WITHOUT THE WRITTEN CONSENT OF THE ARCHITECT OR AUTHOR OF SAID DOCUMENTS.	CADD AVL DESIGNED RRVP APPROVED RBN	DATE JUL 2018 DATE JUL 2018 DATE JUL 2018	NO.	REVISIONS	CHK	DATE	PAPER SIZE 20X30 SCALE AS SHOWN	SHEET NO. EA-0501 PROJECT NO. SO-G-17-036

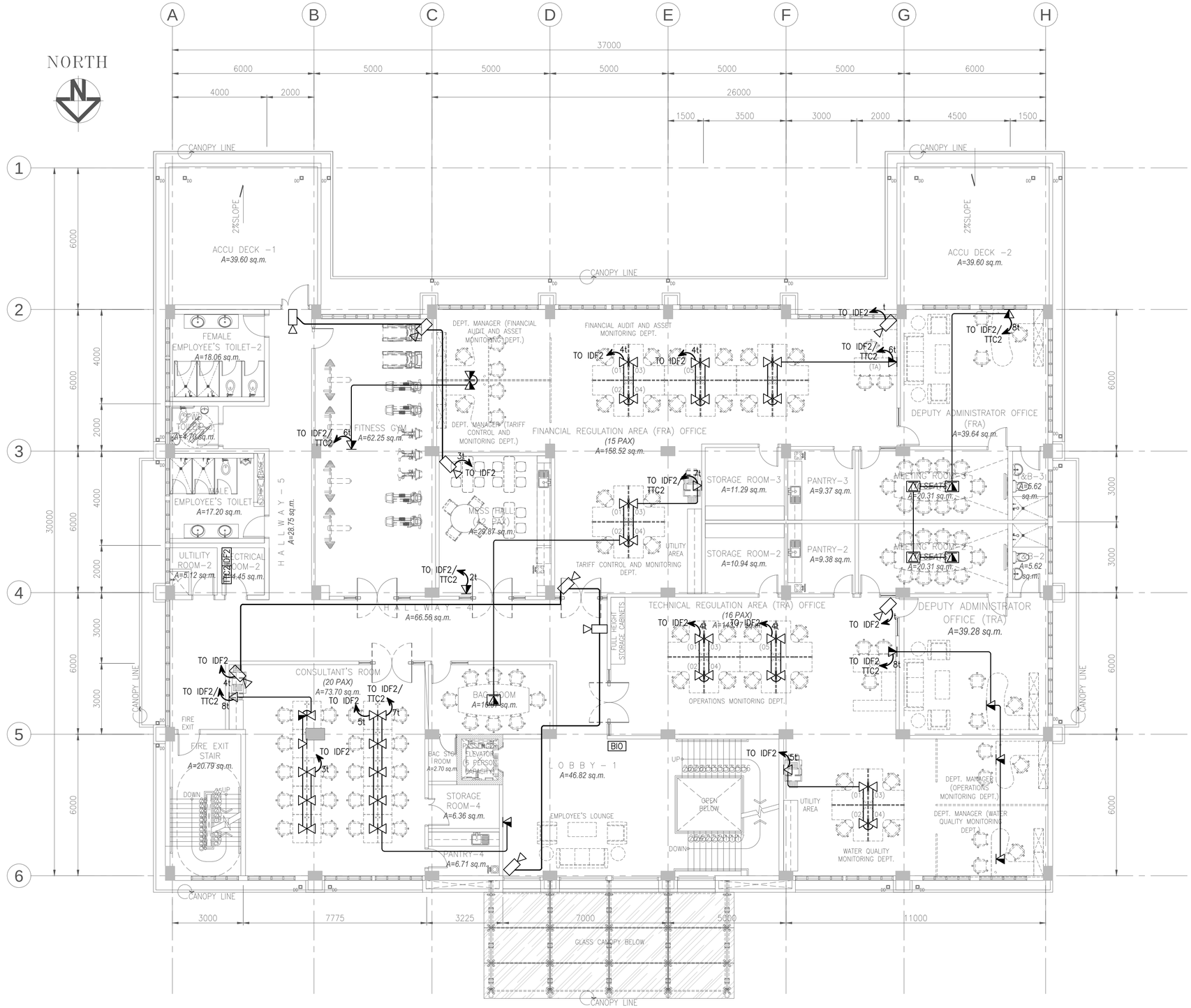

I — SECOND FLOOR TEL/DATA & CCTV LAYOUT

EA–0502 SCALE 1:100M

a.c.ONG CONSULTING INC.
Engineering + Management
ISO 9001:2015 Certified
2F LTA Building 118 Perea Street, Legaspi Village, 1229 Makati City, Philippines
Tel. Nos.: +63 2 8935827 Fax No.: +63 2 8935829
Email: acoconsulting@aco.com.ph Website: www.aco.com.ph

CERTIFIED BY		OWNER	PROJECT TITLE/LOCATION	CLIENT		SHEET CONTENTS
RONALD B. NAVARRO PROFESSIONAL ELECTRONICS ENGINEER	REG. NO.: 1020 TIN NO. : 303–246–245 PTR NO. : 6614942 DATE : JANUARY 04, 2018 PLACE : MAKATI CITY	METROPOLITAN WATERWORKS AND SEWERAGE SYSTEM REGULATORY OFFICE MWSS COMPOUND, KATIPUNAN AVENUE, MATANDANG BALARA, QUEZON CITY	3-STOREY OFFICE BUILDING WITH ROOF DECK MWSS COMPOUND, KATIPUNAN AVENUE, MATANDANG BALARA, QUEZON CITY	PROJECT PROPONENT MELCHOR S. CORDOVA ALTERNATE END–USER FOR RO BUILDING	APPROVED BY: PATRICK LESTER N. TY CHIEF REGULATOR, MWSS RO	SECOND FLOOR TEL/DATA & CCTV LAYOUT

R.A. 9266 SEC. 33
DRAWINGS AND SPECIFICATIONS AND CONTRACT DOCUMENTS DULY SIGNED, STAMPED OR SEALED AS INSTRUMENTS FOR SERVICE ARE THE INTELLECTUAL PROPERTY AND DOCUMENTS OF ARCHITECT, WHETHER THE OBJECT FOR WHICH THEY ARE MADE IS EXECUTED OR NOT; IT SHALL BE UNLAWFUL FOR ANY PERSON TO DUPLICATE OR TO MAKE COPIES OF SAID DOCUMENTS FOR USE IN THE REPETITION OF AND FOR OTHER PROJECTS OR BUILDINGS, WHETHER EXECUTED PARTLY OR IN WHOLE, WITHOUT THE WRITTEN CONSENT OF THE ARCHITECT OR AUTHOR OF SAID DOCUMENTS.

CADD	DATE	NO.	REVISIONS	CHK	DATE	PAPER SIZE	SHEET NO.
AVL	JUL 2018					20X30	EA-0502
DESIGNED	DATE					SCALE	PROJECT NO.
RRVP	JUL 2018					AS SHOWN	SO-G-17-036
APPROVED	DATE						
RBN	JUL 2018						

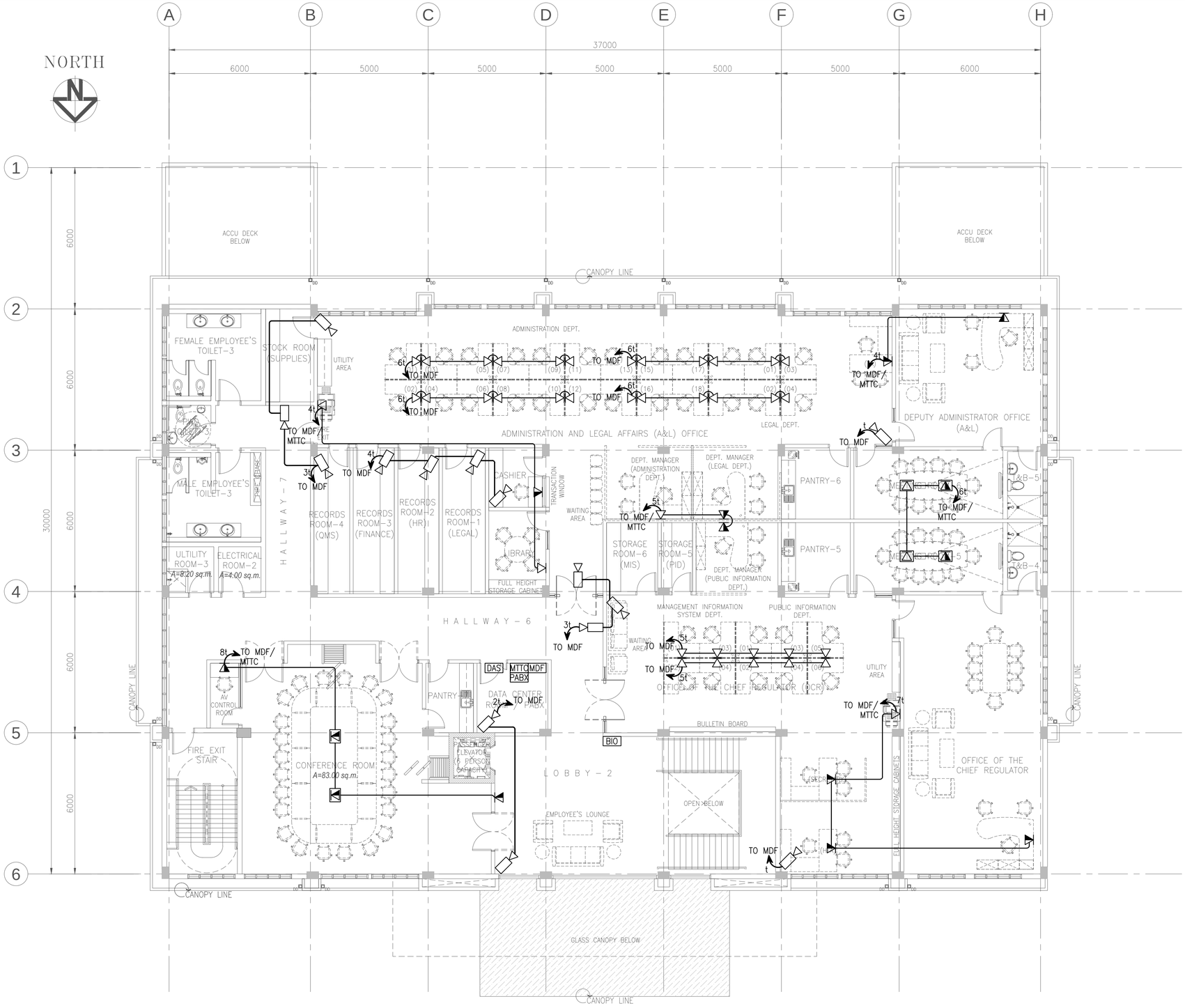

I THIRD FLOOR TEL/DATA & CCTV LAYOUT

EA-0503 SCALE 1:100M

a.c.ong CONSULTING INC.
Engineering + Management
ISO 9001:2015 Certified
2F LTA Building 118 Perea Street, Legaspi Village, 1229 Makati City, Philippines
Tel. Nos.: +63 2 8935827 Fax No.: +63 2 8935829
Email: acoconsulting@aco.com.ph Website: www.aco.com.ph

CERTIFIED BY		OWNER	PROJECT TITLE/LOCATION	CLIENT		SHEET CONTENTS
RONALD B. NAVARRO PROFESSIONAL ELECTRONICS ENGINEER	REG. NO.: 1020 TIN NO. : 303-246-245 PTR NO. : 6614942 DATE : JANUARY 04, 2018 PLACE : MAKATI CITY	METROPOLITAN WATERWORKS AND SEWERAGE SYSTEM REGULATORY OFFICE MWSS COMPOUND, KATIPUNAN AVENUE, MATANDANG BALARA, QUEZON CITY	3-STOREY OFFICE BUILDING WITH ROOF DECK MWSS COMPOUND, KATIPUNAN AVENUE, MATANDANG BALARA, QUEZON CITY	PROJECT PROPONENT MELCHOR S. CORDOVA ALTERNATE END-USER FOR RO BUILDING	APPROVED BY: PATRICK LESTER N. TY CHIEF REGULATOR, MWSS RO	THIRD FLOOR TEL/DATA & CCTV LAYOUT

R.A. 9266 SEC. 33
DRAWINGS AND SPECIFICATIONS AND CONTRACT DOCUMENTS DULY SIGNED, STAMPED OR SEALED AS INSTRUMENTS FOR SERVICE ARE THE INTELLECTUAL PROPERTY AND DOCUMENTS OF ARCHITECT, WHETHER THE OBJECT FOR WHICH THEY ARE MADE IS EXECUTED OR NOT. IT SHALL BE UNLAWFUL FOR ANY PERSON TO DUPLICATE OR TO MAKE COPIES OF SAID DOCUMENTS FOR USE IN THE REPETITION OF AND FOR OTHER PROJECTS OR BUILDINGS, WHETHER EXECUTED PARTLY OR IN WHOLE, WITHOUT THE WRITTEN CONSENT OF THE ARCHITECT OR AUTHOR OF SAID DOCUMENTS.

CADD	DATE	NO.	REVISIONS	CHK	DATE	PAPER SIZE	SHEET NO.
AVL	JUL 2018					20X30	EA-0503
DESIGNED	DATE					SCALE	PROJECT NO.
RRVP	JUL 2018					AS SHOWN	SO-G-17-036
APPROVED	DATE						
RBN	JUL 2018						

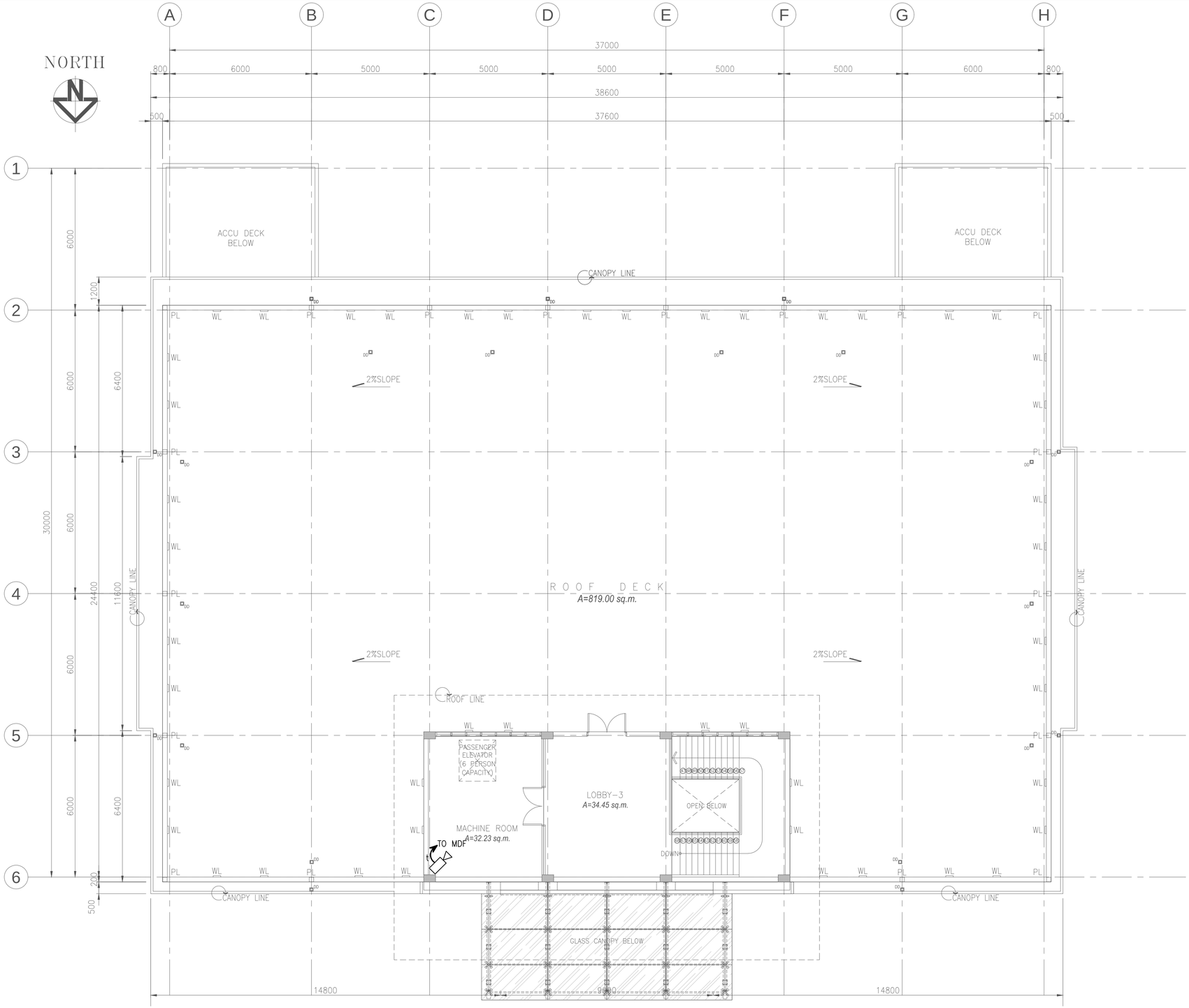

1 ROOF DECK CCTV LAYOUT

EA-0504 SCALE 1:100M

a.c.ong CONSULTING INC.
Engineering + Management
ISO 9001:2015 Certified
2F LTA Building 118 Perea Street, Legaspi Village, 1229 Makati City, Philippines
Tel. Nos.: +63 2 8935827 Fax No.: +63 2 8935829
Email: acoconsulting@aco.com.ph Website: www.aco.com.ph

CERTIFIED BY

RONALD B. NAVARRO
PROFESSIONAL ELECTRONICS ENGINEER

REG. NO.: 1020
TIN NO. : 303-246-245
PTR NO. : 6614942
DATE : JANUARY 04, 2018
PLACE : MAKATI CITY

OWNER: METROPOLITAN WATERWORKS AND SEWERAGE SYSTEM REGULATORY OFFICE
MWSS COMPOUND, KATIPUNAN AVENUE, MATANDANG BALARA, QUEZON CITY

PROJECT TITLE/LOCATION: 3-STOREY OFFICE BUILDING WITH ROOF DECK
MWSS COMPOUND, KATIPUNAN AVENUE, MATANDANG BALARA, QUEZON CITY

CLIENT
PROJECT PROPONENT: MELCHOR S. CORDOVA, ALTERNATE END-USER FOR RO BUILDING
APPROVED BY: PATRICK LESTER N. TY, CHIEF REGULATOR, MWSS RO

SHEET CONTENTS: ROOF DECK CCTV LAYOUT

R.A. 9266 SEC. 33
DRAWINGS AND SPECIFICATIONS AND CONTRACT DOCUMENTS DULY SIGNED, STAMPED OR SEALED AS INSTRUMENTS FOR SERVICE ARE THE INTELLECTUAL PROPERTY AND DOCUMENTS OF ARCHITECT, WHETHER THE OBJECT FOR WHICH THEY ARE MADE IS EXECUTED OR NOT. IT SHALL BE UNLAWFUL FOR ANY PERSON TO DUPLICATE OR TO MAKE COPIES OF SAID DOCUMENTS FOR USE IN THE REPETITION OF AND FOR OTHER PROJECTS OR BUILDINGS, WHETHER EXECUTED PARTLY OR IN WHOLE, WITHOUT THE WRITTEN CONSENT OF THE ARCHITECT OR AUTHOR OF SAID DOCUMENTS.

CADD	DATE	NO.	REVISIONS	CHK	DATE
AVL	JUL 2018				
DESIGNED	DATE				
RRVP	JUL 2018				
APPROVED	DATE				
RBN	JUL 2018				

PAPER SIZE	SHEET NO.
20X30	EA-0504
SCALE	PROJECT NO.
AS SHOWN	SO-G-17-036

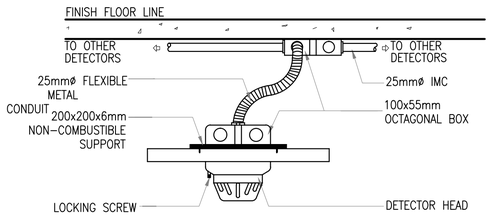

1 (FLUSH-MOUNTED) DETECTOR MOUNTING DETAIL

EA-1001 SCALE NTS

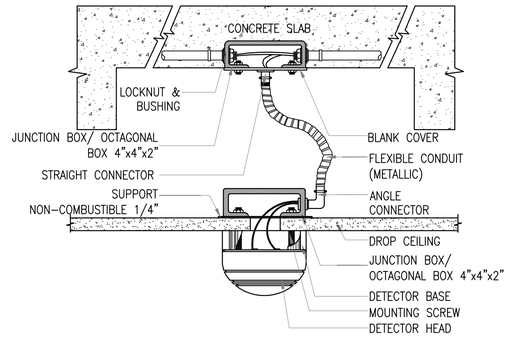

2 SMOKE/HEAT DETECTOR MOUNTING DETAIL ON DROP CEILING WITH CONDUITS EMBEDDED

EA-1001 SCALE NTS

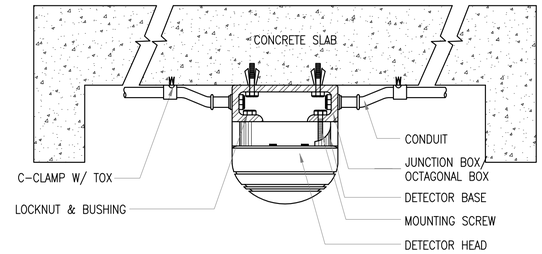

3 SMOKE/HEAT DETECTOR MOUNTING DETAIL WITH CONDUITS EXPOSED

EA-1001 SCALE NTS

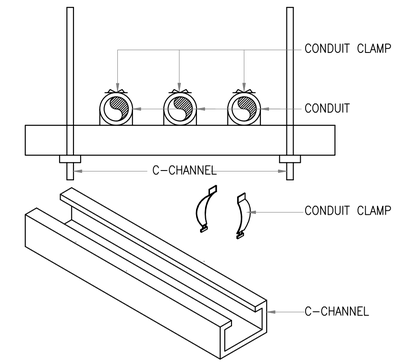

4 TYPICAL CONDUIT SUPPORT DETAIL

EA-1001 SCALE NTS

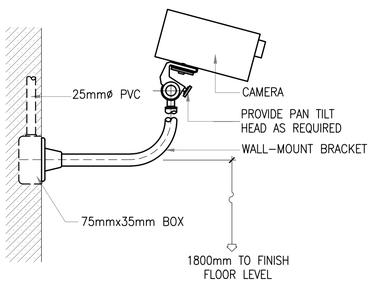

5 (WALL MOUNTED) CCTV MOUNTING DETAIL

EA-1001 SCALE NTS

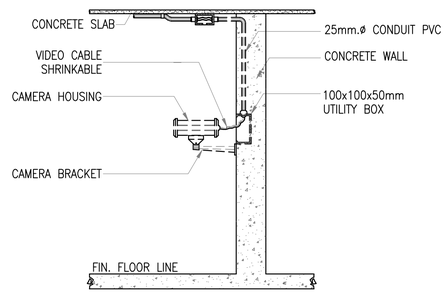

6 TYPICAL CAMERA MOUNTING DETAIL

EA-1001 SCALE NTS

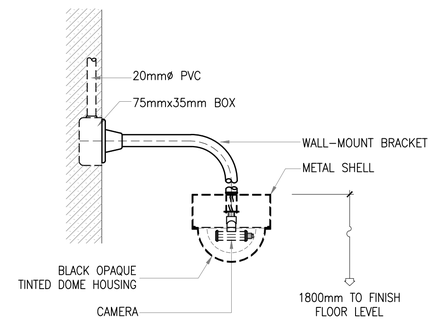

7 TYPICAL DOMED TYPE CAMERA MOUNTING DETAIL (WALL MOUNTED)

EA-1001 SCALE NTS

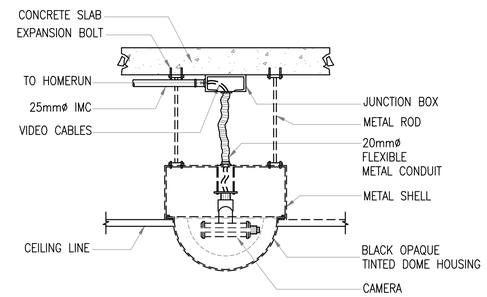

8 TYPICAL CAMERA MOUNTING DETAIL

EA-1001 SCALE NTS

NOTE

1. ALL DIMENSIONS ARE IN MILLIMETERS OTHERWISE NOTED.

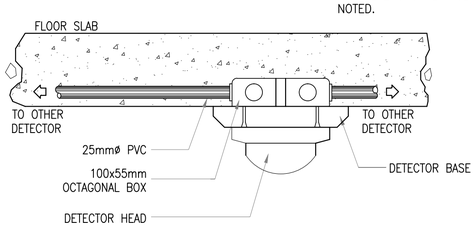

9 (SURFACE MOUNTED) DETECTOR MOUNTING DETAIL

EA-1001 SCALE NTS

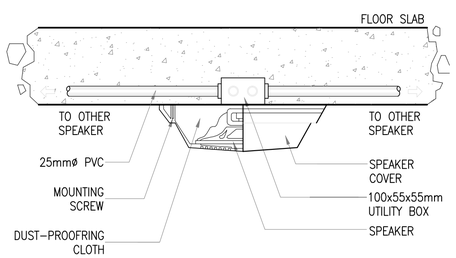

10 SURFACE MOUNTED SPEAKER DETAIL

EA-1001 SCALE NTS

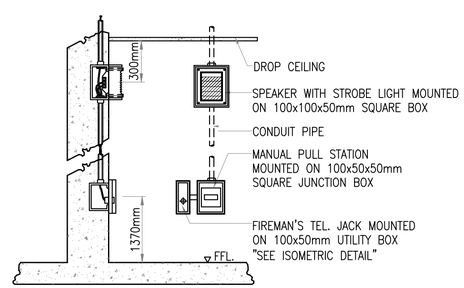

11 SPEAKER HORN, MANUAL PULL STATION AND FIREMAN'S TELEPHONE JACK MOUNTING DETAILS

EA-1001 SCALE NTS

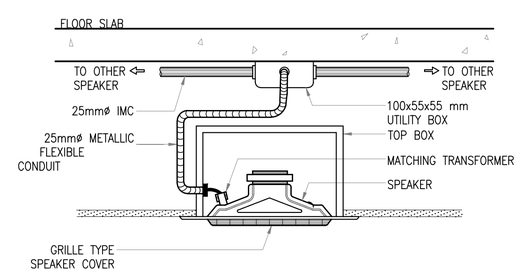

12 FLUSH-MOUNTED SPEAKER DETAIL

EA-1001 SCALE NTS

a.c.ong CONSULTING INC.
Engineering + Management
ISO 9001:2015 Certified
2F LTA Building 118 Perea Street, Legaspi Village, 1229 Makati City, Philippines
Tel. Nos.: +63 2 8935827 Fax No.: +63 2 8935829
Email: acoconsulting@aco.com.ph Website: www.aco.com.ph

CERTIFIED BY: RONALD B. NAVARRO, PROFESSIONAL ELECTRONICS ENGINEER
REG. NO.: 1020
TIN NO. : 303-246-245
PTR NO. : 6614942
DATE : JANUARY 04, 2018
PLACE : MAKATI CITY

OWNER: METROPOLITAN WATERWORKS AND SEWERAGE SYSTEM REGULATORY OFFICE
MWSS COMPOUND, KATIPUNAN AVENUE, MATANDANG BALARA, QUEZON CITY

PROJECT TITLE/LOCATION: 3-STOREY OFFICE BUILDING WITH ROOF DECK
MWSS COMPOUND, KATIPUNAN AVENUE, MATANDANG BALARA, QUEZON CITY

CLIENT
PROJECT PROPONENT: MELCHOR S. CORDOVA, ALTERNATE END-USER FOR RO BUILDING
APPROVED BY: PATRICK LESTER N. TY, CHIEF REGULATOR, MWSS RO

SHEET CONTENTS: MISCELLANEOUS DETAILS

R.A. 9266 SEC. 33
DRAWINGS AND SPECIFICATIONS AND CONTRACT DOCUMENTS DULY SIGNED, STAMPED OR SEALED AS INSTRUMENTS FOR SERVICE ARE THE INTELLECTUAL PROPERTY AND DOCUMENTS OF ARCHITECT, WHETHER THE OBJECT FOR WHICH THEY ARE MADE IS EXECUTED OR NOT. IT SHALL BE UNLAWFUL FOR ANY PERSON TO DUPLICATE OR TO MAKE COPIES OF SAID DOCUMENTS FOR USE IN THE REPETITION OF AND FOR OTHER PROJECTS OR BUILDINGS, WHETHER EXECUTED PARTLY OR IN WHOLE, WITHOUT THE WRITTEN CONSENT OF THE ARCHITECT OR AUTHOR OF SAID DOCUMENTS.

CADD	DATE	NO.	REVISIONS	CHK	DATE	PAPER SIZE	SHEET NO.
AVL	JUL 2018					20X30	EA-1001
DESIGNED	DATE					SCALE	PROJECT NO.
RRVP	JUL 2018					AS SHOWN	SO-G-17-036
APPROVED	DATE						
RBN	JUL 2018						

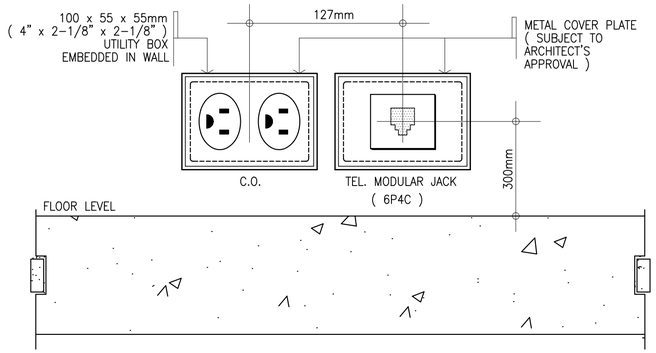

1 TYPICAL C.O. & TELEPHONE MODULAR JACK MOUNTING DETAIL

EA-1002 SCALE NTS

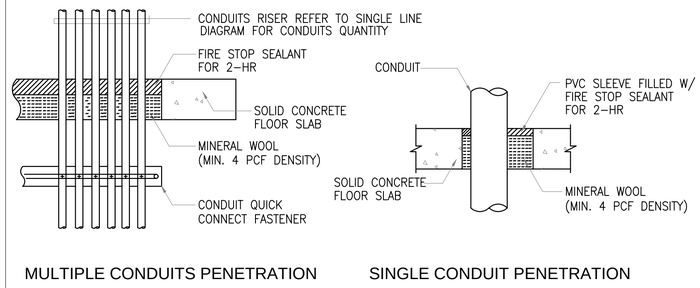

2 RACEWAY PENETRATION WITH FIRESTOP

EA-1002 SCALE NTS

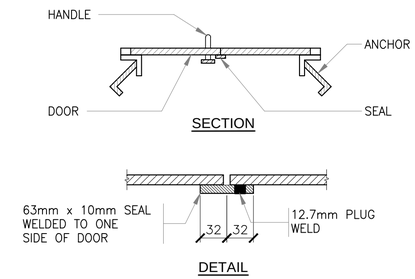

3 COVER SEAL DETAIL

EA-1002 SCALE NTS

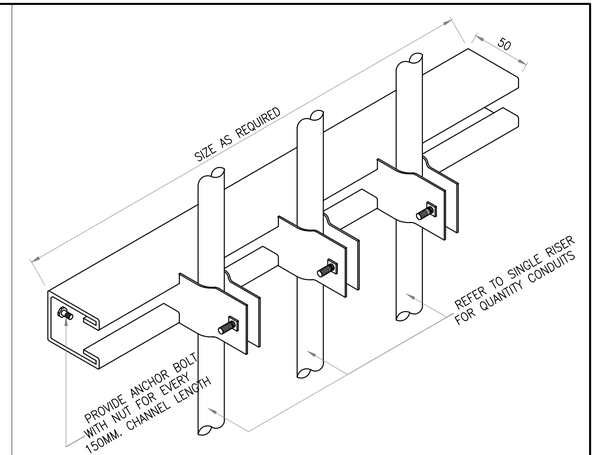

4 CONDUIT RISER DETAIL

EA-1002 SCALE NTS

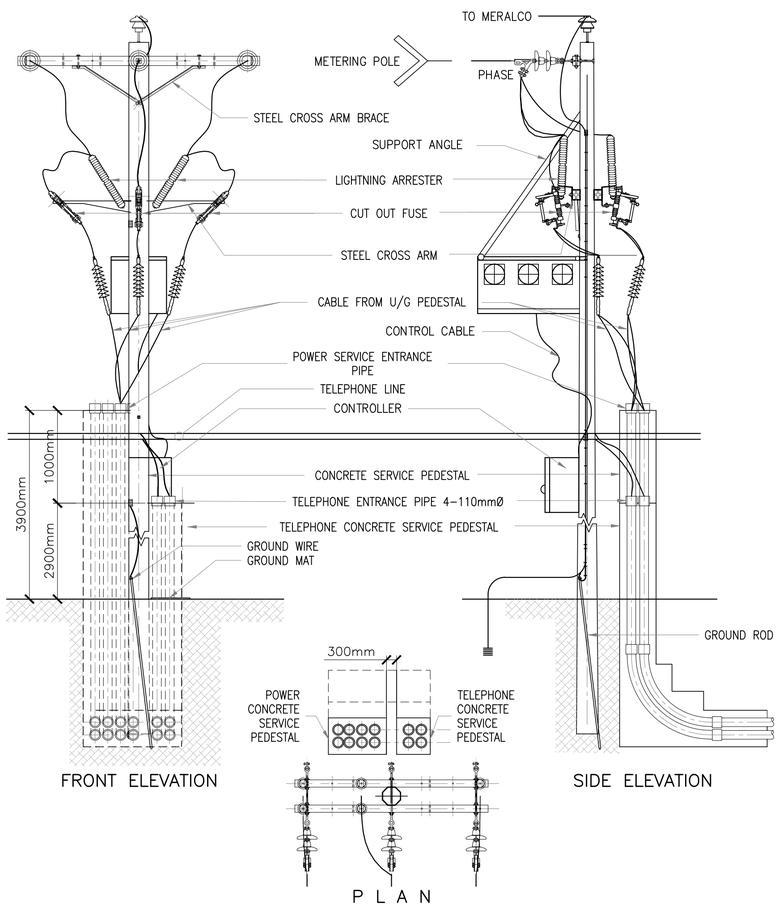

5 SERVICE ENTRANCE DETAILS

EA-1002 SCALE NTS

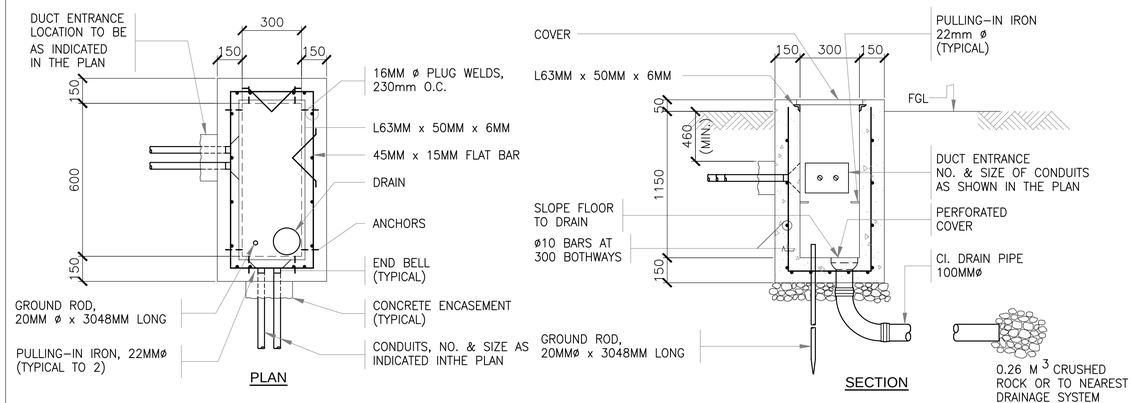

6 TELEPHONE HANDHOLE DETAIL

EA-1002 SCALE NTS

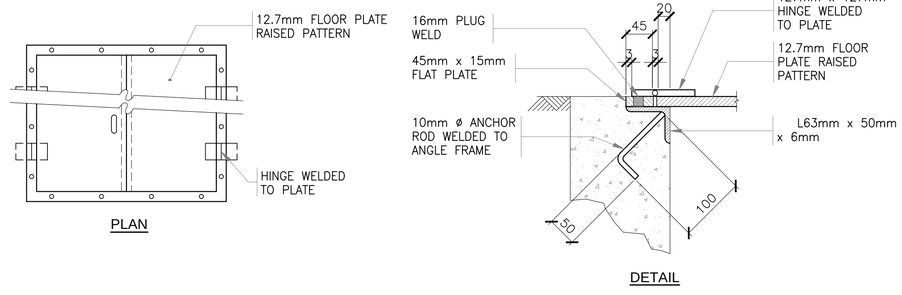

7 HANDHOLE COVER DETAIL

EA-1002 SCALE NTS

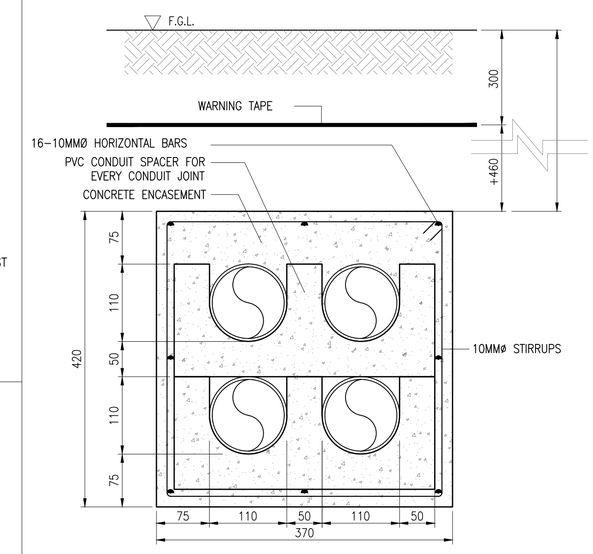

8 DUCTBANK (TELCO) DETAIL

EA-1002 SCALE NTS

a.c.ong CONSULTING INC.
Engineering + Management
ISO 9001:2015 Certified
2F LTA Building 118 Perea Street, Legaspi Village, 1229 Makati City, Philippines
Tel. Nos.: +63 2 8935827 Fax No.: +63 2 8935829
Email: acoconsulting@aco.com.ph Website: www.aco.com.ph

CERTIFIED BY		OWNER	PROJECT TITLE/LOCATION	CLIENT		SHEET CONTENTS
RONALD B. NAVARRO PROFESSIONAL ELECTRONICS ENGINEER	REG. NO.: 1020 TIN NO. : 303-246-245 PTR NO. : 6614942 DATE : JANUARY 04, 2018 PLACE : MAKATI CITY	METROPOLITAN WATERWORKS AND SEWERAGE SYSTEM REGULATORY OFFICE MWSS COMPOUND, KATIPUNAN AVENUE, MATANDANG BALARA, QUEZON CITY	3-STOREY OFFICE BUILDING WITH ROOF DECK MWSS COMPOUND, KATIPUNAN AVENUE, MATANDANG BALARA, QUEZON CITY	PROJECT PROPONENT MELCHOR S. CORDOVA ALTERNATE END-USER FOR RO BUILDING	APPROVED BY: PATRICK LESTER N. TY CHIEF REGULATOR, MWSS RO	MISCELLANEOUS DETAILS

R.A. 9266 SEC. 33
DRAWINGS AND SPECIFICATIONS AND CONTRACT DOCUMENTS DULY SIGNED, STAMPED OR SEALED AS INSTRUMENTS FOR SERVICE ARE THE INTELLECTUAL PROPERTY AND DOCUMENTS OF ARCHITECT, WHETHER THE OBJECT FOR WHICH THEY ARE MADE IS EXECUTED OR NOT. IT SHALL BE UNLAWFUL FOR ANY PERSON TO DUPLICATE OR TO MAKE COPIES OF SAID DOCUMENTS FOR USE IN THE REPETITION OF AND FOR OTHER PROJECTS OR BUILDINGS, WHETHER EXECUTED PARTLY OR IN WHOLE, WITHOUT THE WRITTEN CONSENT OF THE ARCHITECT OR AUTHOR OF SAID DOCUMENTS.

CADD	DATE	NO.	REVISIONS	CHK	DATE	PAPER SIZE	SHEET NO.
AVL	JUL 2018					20X30	EA-1002
DESIGNED	DATE					SCALE	PROJECT NO.
RRVP	JUL 2018					AS SHOWN	SO-G-17-036
APPROVED	DATE						
RBN	JUL 2018						