DRAWING INDEX

E-0101	DRAWING INDEX, GENERAL NOTES, ABBREVIATIONS, LEGEND & SYMBOLS
E-0201	POWER RISER DIAGRAM
E-0301	SITE UTILITIES AND LIGHTING LAYOUT, AUXILIARY POWER AND LIGHTING LAYOUT
E-0302	GROUND FLOOR POWER LAYOUT
E-0303	SECOND FLOOR POWER LAYOUT
E-0304	THIRD FLOOR POWER LAYOUT
E-0305	ROOF DECK POWER LAYOUT
E-0401	GROUND FLOOR LIGHTING LAYOUT
E-0402	SECOND FLOOR LIGHTING LAYOUT
E-0403	THIRD FLOOR LIGHTING LAYOUT
E-0404	ROOF DECK LIGHTING LAYOUT
E-0501	LIGHTNING PROTECTION SYSTEM RISER DIAGRAM, GROUND FLOOR GROUNDING AND ROOF DECK LIGHTNING PROTECTION SYSTEM LAYOUT
E-1001	SCHEDULE OF LOADS
E-1002	SCHEDULE OF LOADS
E-1003	SCHEDULE OF LOADS
E-3001	MISCELLANEOUS DETAILS
E-3002	MISCELLANEOUS DETAILS
E-3003	MISCELLANEOUS DETAILS

GENERAL NOTES:

1. ALL ELECTRICAL INSTALLATION HEREIN SHALL BE DONE IN ACCORDANCE WITH THE PLANS/LAYOUTS, SPECIFICATIONS & STANDARDS, WITH PROVISIONS OF THE LATEST EDITION OF THE PHILIPPINE ELECTRICAL CODE, THE LOCAL RULES & REGULATIONS AND THE REQUIREMENTS OF THE LOCAL POWER COMPANY.
2. ALL ELECTRICAL WORKS HEREIN SHALL BE IMPLEMENTED BY EXPERIENCED AND SKILLED PERSONNEL UNDER THE SUPERVISION OF A DULY LICENSED ELECTRICAL ENGINEER. ALL WORKS SHALL BE CARRIED OUT AS PER HSSE (HEALTH/SAFETY/SECURITY/ENVIRONMENT) STANDARDS.
3. ELECTRICAL SERVICE VOLTAGE IS 400V, 3-PHASE, 4-WIRE PLUS GROUND, 60 Hz.
4. ALL MATERIALS AND EQUIPMENT TO BE USED SHALL BE NEW AND SHALL CONFORM TO THE LATEST PROVISIONS OF APPLICABLE STANDARDS.
5. MINIMUM CONDUCTOR SIZE FOR LIGHTING AND POWER OUTLET SHALL BE 3.5mm2 THHN/THWN-2.
6. ALL EMBEDDED CONDUITS SHALL BE PVC, EXPOSED CONDUITS SHALL USE IMC OR EMT WITH COMPRESSION TYPE FITTINGS AND SERVICE ENTRANCE SHALL USE RSC. ALL CONDUITS SHALL BE PROPERLY SUPPORTED OR ANCHORED FOR PERMANENT CONNECTION WITH CONCRETE WALLING OR BEAM.
7. CONDUITS SHALL BE PROTECTED AGAINST DAMAGE DURING CONSTRUCTION. ALL ENDS SHALL BE PLUGGED TO PREVENT WATER INGRESS AND PRESENCE OF MOISTURE AND FOREIGN MATERIALS AFTER INSTALLATION.
8. THE MAXIMUM NUMBER OF CONDUCTORS IN TRADE SIZES OF CONDUITS SHALL BE AS FOLLOWS:

CABLE SIZES		MAXIMUM NUMBER OF CONDUCTORS IN CONDUIT			
mmø	mm^2	20mmø PVC	25mmø PVC	32mmø PVC	50mmø PVC
		15mmø PVC	20mmø PVC	25mmø PVC	32mmø PVC
1.6	2.0	4	6	10	18
2.0	3.5	3	5	8	15
2.6	5.5	1	4	7	13
	8.0	1	3	4	7
	14	1	1	3	4

9. ALL BRANCH CIRCUITS SHALL BE PROVIDED WITH ADDITIONAL GROUND IN ACCORDANCE WITH THE PHILIPPINE ELECTRICAL CODE TABLE 2.50.6.13 PEC 2017 PART 1 VOL 1 UNLESS OTHERWISE SPECIFIED, INCLUDING WIRING FROM CONTROLLER TO THE EQUIPMENT.
10. ELECTRICAL TRADE SIZE SHALL BE USED, A MINIMUM OF 15mmϕ FOR CONDUITS AND IN NO CASE SHALL THERE BE MORE THAN FOUR QUARTER BENDS IN ONE RUN. IN CASE OF MORE THAN FOUR QUARTER BENDS, PULLBOX SHALL BE PROVIDED.
11. TRADE CONTRACTORS SHALL PROVIDE CONTROLLERS FOR ELECTRICALLY OPERATED EQUIPMENT E.G. FIRE PROTECTION AND SANITARY SYSTEM AND OTHER SPECIAL SYSTEMS INCLUDING WIRING FROM CONTROLLER TO THE EQUIPMENT.
12. ALL SERVICE EQUIPMENT, SWITCHGEARS, PANELBOARDS, ECB AND NON-CURRENT CARRYING METAL PARTS SHALL BE PROPERLY GROUNDED IN ACCORDANCE WITH THE PHILIPPINE ELECTRICAL CODE.
13. THE FOLLOWING TESTS SHALL BE PERFORMED INCLUSIVE OF THE INSTALLATION TO BE SUBMITTED IN DETAILS:
    A)INSULATION RESISTANCE TEST, 500VDC
    B)GROUND RESISTANCE TEST (5 OHMS)
    C)OPERATIONAL TEST
    D)PHASE SEQUENCE TEST
    E)SYSTEM TEST
14. COLOR CODING OF WIRES SHALL BE AS FOLLOWS:
    LINE 1 – RED NEUTRAL – WHITE
    LINE 2 – YELLOW GROUND – GREEN
    LINE 3 – BLUE CONTROL – BLACK
15. ALL RACEWAYS, WALL AND FLOOR PENETRATIONS SHALL BE PROVIDED WITH FIRE BARRIER OR FIRE RATED SEALANT.
16. ALL OUTDOOR BOXES/EQUIPMENT SHALL USE WEATHERPROOF TYPE ENCLOSURES.
17. A PLASTIC HOLDER OR JACKET DIRECTORY SHALL BE PROVIDED FOR EACH PANELBOARD INDICATION SINGLE LINE DIAGRAM AND LOAD SCHEDULE.
18. ALL ELECTRICAL CIRCUITS SHALL BE WIRED ACCORDING TO THE LOAD SCHEDULE AND SINGLE LINE DIAGRAM.
19. ALL EXIT LIGHTS AND EMERGENCY LIGHTS SHALL BE WIRED AHEAD OF THE LOCAL SWITCH AND SHALL BE OF GROUNDING TYPE.
20. SURFACE MOUNTED CONDUITS SHALL BE SUPPORTED AND SECURED BY C-CHANNELS, CLAMP OR U-BOLT.
21. SWITCHES SHALL BE RATED 15 AMPS, 300 VOLTS AND CONVENIENCE OUTLET SHALL BE WITH GROUNDING CONNECTION AND A QUICK CONNECT TYPE.
22. TERMINATION SHALL BE MADE USING 3M SPRING CONNECTORS OR EQUIVALENT, FOR SPLICING OF WIRES (LIGHTING SWITCH AND POWER OUTLET).
23. PULLBOXES SHALL HAVE DEDICATED BRANCH CIRCUIT RUNS AND SHALL NOT BE SHARED WITH OTHER CIRCUITS.

MOUNTING HEIGHTS:

PANELBOARD	1900mm FROM TOP OF PANEL TO FLOOR FINISH
CONVENIENCE OUTLET	300mm FROM CENTER OF DEVICE TO FLOOR FINISH, 300mm FROM CENTER OF DEVICE TO COUNTER TOP (VERIFY ACTUAL)
WALL SWITCHES, ENCLOSED CIRCUIT BREAKERS	1400mm FROM CENTER OF DEVICE TO FLOOR FINISH

ABBREVIATION

MCB	MINIATURE CIRCUIT BREAKER	ATS	AUTOMATIC TRANSFER SWITCH
MCCB	MOLDED CASE CIRCUIT BREAKER	AT	AMPERE TRIP
ECB	ENCLOSED CIRCUIT BREAKER	AF	AMPERE FRAME
ACCU	AIR COOLED CONDENSING UNIT	CO	CONVENIENCE OUTLET
EF	EXHAUST FAN	MW	MICROWAVE (GFCI)
LED	LIGHT EMITTING DIODE	REF	REFRIGERATOR (GFCI)
SL	STRIP LIGHTS	WD	WATER DISPENSER
THHN	HEAT RESISTANT THERMOPLASTIC WIRE	WP	WEATHERPROOF
DP	DISTRIBUTION PANELBOARD	IMC	INTERMEDIATE METAL CONDUIT
PP	POWER PANELBOARD	PVC	POLYVINYL CHLORIDE CONDUIT
ATS	AUTOMATIC TRANSFER SWITCH	RSC	RIGID STEEL CONDUIT
GFCI	GROUND FAULT CIRCUIT INTERRUPTER	RDL	ROOF DECK LIGHTS
SL	STRIP LIGHTS	FL	FENCE LIGHTS
DPM	DIGITAL POWER METER	CM	CEILING MOUNTED

LEGENDS & SYMBOLS:

SINGLE LINE DIAGRAM/POWER RISER

	SERVICE ENTRANCE
	CIRCUIT BREAKER, RATING AS INDICATED
	DISCONNECTING MEANS BREAKER (ENCLOSED CIRCUIT BREAKER)
	GROUND BAR
M	KILOWATT-HOUR METER
M	MOTOR LOAD
	MOTOR CONTROLER

POWER

	DUPLEX CONVENIENCE OUTLET, 15A, 240V, WALL OR TABLE MOUNTED
WP	DUPLEX CONVENIENCE OUTLET, 15A, 240V, OUTDOOR WEATHERPROOF, WALL MOUNTED
	SIMPLEX CONVENIENCE OUTLET, 15A, 240V
	DUPLEX CONVENIENCE OUTLET, 15A, 240V, FLOOR MOUNTED
	SPECIAL PURPOSE CONVENIENCE OUTLET, 20A, 240V
	POWER PANELBOARD
J	JUNCTION BOX
PB	PULLBOX
XXX/XX	CIRCUIT HOMERUN XXX-XX — CIRCUIT NO. FLOOR PANEL LOCATION TYPE OF PANEL: POWER (PP), DISTRIBUTION (DP)
	CIRCUIT RUN CONCEALED IN WALL & CEILING
	CIRCUIT RUN EMBEDDED IN FLOOR SLAB, CEILING SLAB, CONCRETE WALL
RU	RISER UP
RD	RISER DOWN
M	MOTOR LOAD
	FAN COIL UNIT
	AIR COOLED CONDENSING UNIT

LIGHTING

	1x9W LED SUSPENDED OR SURFACE MOUNTED DOWNLIGHT
	1x15W LED T-5 SUSPENDED OR SURFACE MOUNTED INDUSTRIAL LIGHTING ALUMINUM REFLECTOR AND SPECULAR LOUVER
	2x15W T-5 RECESSED MOUNTED LED LAMP WITH CENTRAL LOUVER & WHITE POWDER COATED BACKING REFLECTOR, ZINC PHOSPHATED STEEL SHEET HOUSING WITH POWDER COAT PAINT FINISH, MIRROR FINISH ANODIZED ALUMINUM REFLECTOR & SPECULAR LOUVER
	14W LED LAMP COVELIGHT
WL	1x9W LED 160mmx160mmx31mm THICK WALL LUMINAIRE
PL	1x9W LED 140mmx140mmx350mm HIGH POST LUMINAIRE
	BOLLARD LIGHT
	FOCAL FLOOR LIGHTS
	IN GROUND LUMINAIRES
	RECESSED FLOOR LUMINAIRES
	LIGHT POLE
	BATTERY PACK EMERGENCY LIGHTS WITH 1x8W LED LAMP, NICKEL CADMIUM, 3 HOURS DURATION
	CEILING MOUNTED EXIT SIGNAGE WITH 2W LED LUMINAIRE COMPLETE WITH EMERGENCY BATTERY PACK, 3 HOURS DURATION
	ELEVATOR SHAFT LIGHTING
S	1-GANG SWITCH
Sab	2-GANG SWITCH
Sabc	3-GANG SWITCH
S3wa	1-GANG 3 WAY SWITCH

GROUNDING

	$50mm^2$ BARE COPPER SOFT DRAWN WIRE
	INSULATED COPPER, GREEN PVC SIZE: $100mm^2$ $80mm^2$ $60mm^2$ $50mm^2$ $38mm^2$ $30mm^2$ $14mm^2$ $8.0mm^2$ $5.5mm^2$ $3.5mm^2$ $2.0mm^2$
	GROUND ROD
	GROUND TEST PIT
	EQUIPMENT GROUNDING

a.c.ong CONSULTING INC.
Engineering + Management
ISO 9001:2015 Certified
2F LTA Building 118 Perea Street, Legaspi Village, 1229 Makati City, Philippines
Tel. Nos.: +63 2 8935827 Fax No.: +63 2 8935829
Email: acoconsulting@aco.com.ph Website: www.aco.com.ph

CERTIFIED BY: RODEL JOSELITO B. MANABAT, PROFESSIONAL ELECTRICAL ENGINEER
REG. NO.: 3402
TIN NO. : 158-336-047
PTR NO. : 2733331
DATE : JANUARY 23, 2018
PLACE : MANDALUYONG CITY

OWNER: METROPOLITAN WATERWORKS AND SEWERAGE SYSTEM REGULATORY OFFICE
MWSS COMPOUND, KATIPUNAN AVENUE, MATANDANG BALARA, QUEZON CITY

PROJECT TITLE/LOCATION: 3-STOREY OFFICE BUILDING WITH ROOF DECK
MWSS COMPOUND, KATIPUNAN AVENUE, MATANDANG BALARA, QUEZON CITY

CLIENT
PROJECT PROPONENT: MELCHOR S. CORDOVA, ALTERNATE END-USER FOR RO BUILDING
APPROVED BY: PATRICK LESTER N. TY, CHIEF REGULATOR, MWSS RO

SHEET CONTENTS: DRAWING INDEX, GENERAL NOTES, LEGENDS & SYMBOLS, ABBREVIATIONS

R.A. 9266 SEC. 33
DRAWINGS AND SPECIFICATIONS AND CONTRACT DOCUMENTS DULY SIGNED, STAMPED OR SEALED AS INSTRUMENTS FOR SERVICE ARE THE INTELLECTUAL PROPERTY AND DOCUMENTS OF ARCHITECT, WHETHER THE OBJECT FOR WHICH THEY ARE MADE IS EXECUTED OR NOT. IT SHALL BE UNLAWFUL FOR ANY PERSON TO DUPLICATE OR TO MAKE COPIES OF SAID DOCUMENTS FOR USE IN THE REPETITION OF AND FOR OTHER PROJECTS OR BUILDINGS, WHETHER EXECUTED PARTLY OR IN WHOLE, WITHOUT THE WRITTEN CONSENT OF THE ARCHITECT OR AUTHOR OF SAID DOCUMENTS.

CADD	DATE	NO.	REVISIONS	CHK	DATE	PAPER SIZE	SHEET NO.
AVL	JUL 2018					20X30	E-0101
DESIGNED	DATE						
RRVP	JUL 2018					SCALE	PROJECT NO.
APPROVED	DATE					AS SHOWN	SO-G-17-036
RJBM	JUL 2018						

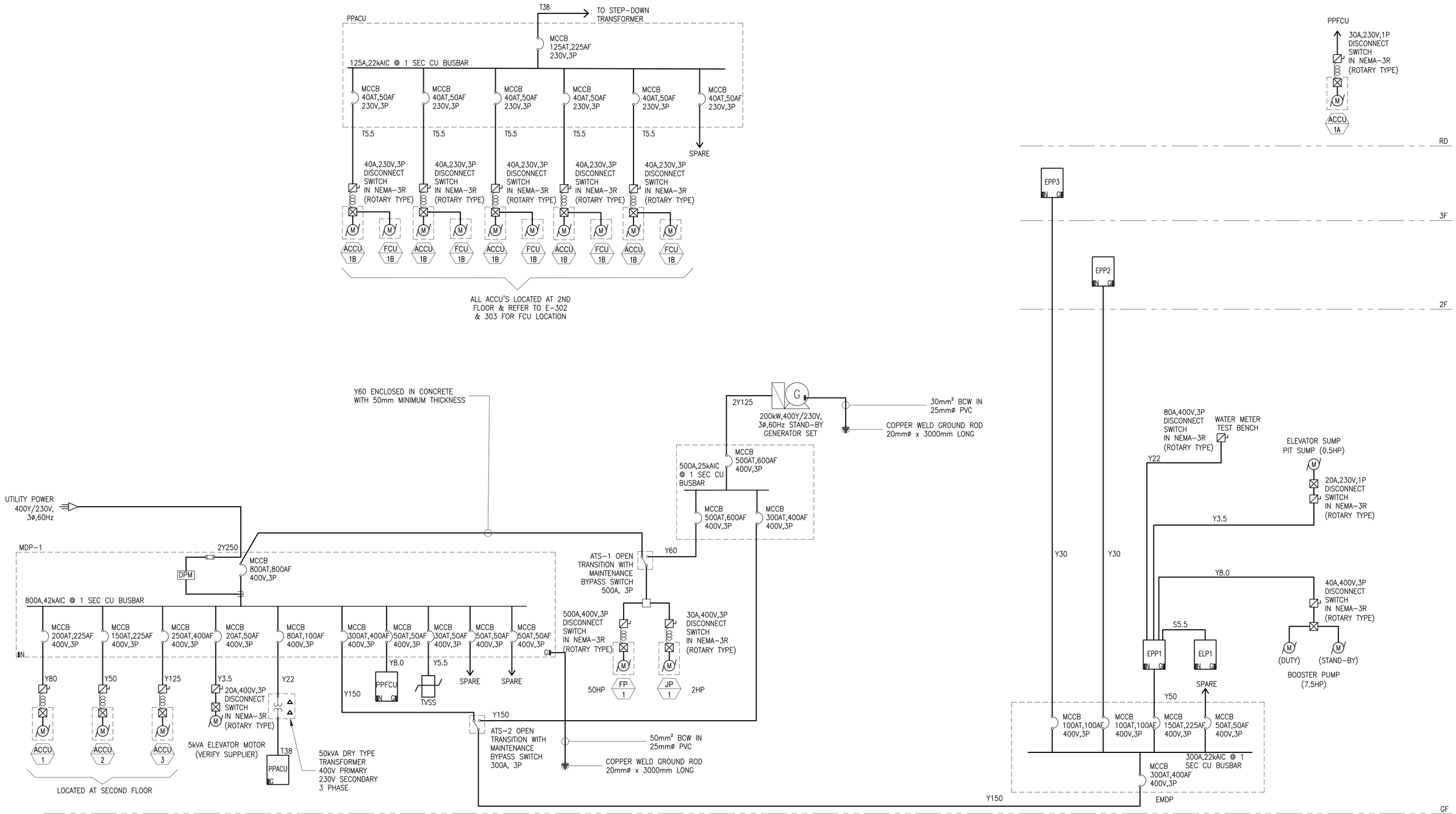

POWER RISER DIAGRAM

I / E-0201

SCALE NTS

a.c.ong CONSULTING INC.
Engineering + Management
ISO 9001:2015 Certified
2F LTA Building 118 Perea Street, Legaspi Village, 1229 Makati City, Philippines
Tel. Nos.: +63 2 8935827 Fax No.: +63 2 8935829
Email: acoconsulting@aco.com.ph Website: www.aco.com.ph

CERTIFIED BY

RODEL JOSELITO B. MANABAT
PROFESSIONAL ELECTRICAL ENGINEER

REG. NO.: 3402
TIN NO. : 158-336-047
PTR NO. : 2733331
DATE : JANUARY 23, 2018
PLACE : MANDALUYONG CITY

OWNER: METROPOLITAN WATERWORKS AND SEWERAGE SYSTEM REGULATORY OFFICE
MWSS COMPOUND, KATIPUNAN AVENUE, MATANDANG BALARA, QUEZON CITY

PROJECT TITLE/LOCATION: 3-STOREY OFFICE BUILDING WITH ROOF DECK
MWSS COMPOUND, KATIPUNAN AVENUE, MATANDANG BALARA, QUEZON CITY

CLIENT
PROJECT PROPONENT: MELCHOR S. CORDOVA, ALTERNATE END-USER FOR RO BUILDING
APPROVED BY: PATRICK LESTER N. TY, CHIEF REGULATOR, MWSS RO

SHEET CONTENTS: POWER RISER DIAGRAM

R.A. 9266 SEC. 33
DRAWINGS AND SPECIFICATIONS AND CONTRACT DOCUMENTS DULY SIGNED, STAMPED OR SEALED AS INSTRUMENTS FOR SERVICE ARE THE INTELLECTUAL PROPERTY AND DOCUMENTS OF ARCHITECT, WHETHER THE OBJECT FOR WHICH THEY ARE MADE IS EXECUTED OR NOT. IT SHALL BE UNLAWFUL FOR ANY PERSON TO DUPLICATE OR TO MAKE COPIES OF SAID DOCUMENTS FOR USE IN THE REPETITION OF AND FOR OTHER PROJECTS OR BUILDINGS, WHETHER EXECUTED PARTLY OR IN WHOLE, WITHOUT THE WRITTEN CONSENT OF THE ARCHITECT OR AUTHOR OF SAID DOCUMENTS.

CADD	DATE	NO.	REVISIONS	CHK	DATE	PAPER SIZE	SHEET NO.
AVL	JUL 2018					20X30	E-0201
DESIGNED	DATE						
RRVP	JUL 2018					SCALE	PROJECT NO.
APPROVED	DATE					AS SHOWN	SO-G-17-036
RJBM	JUL 2018						

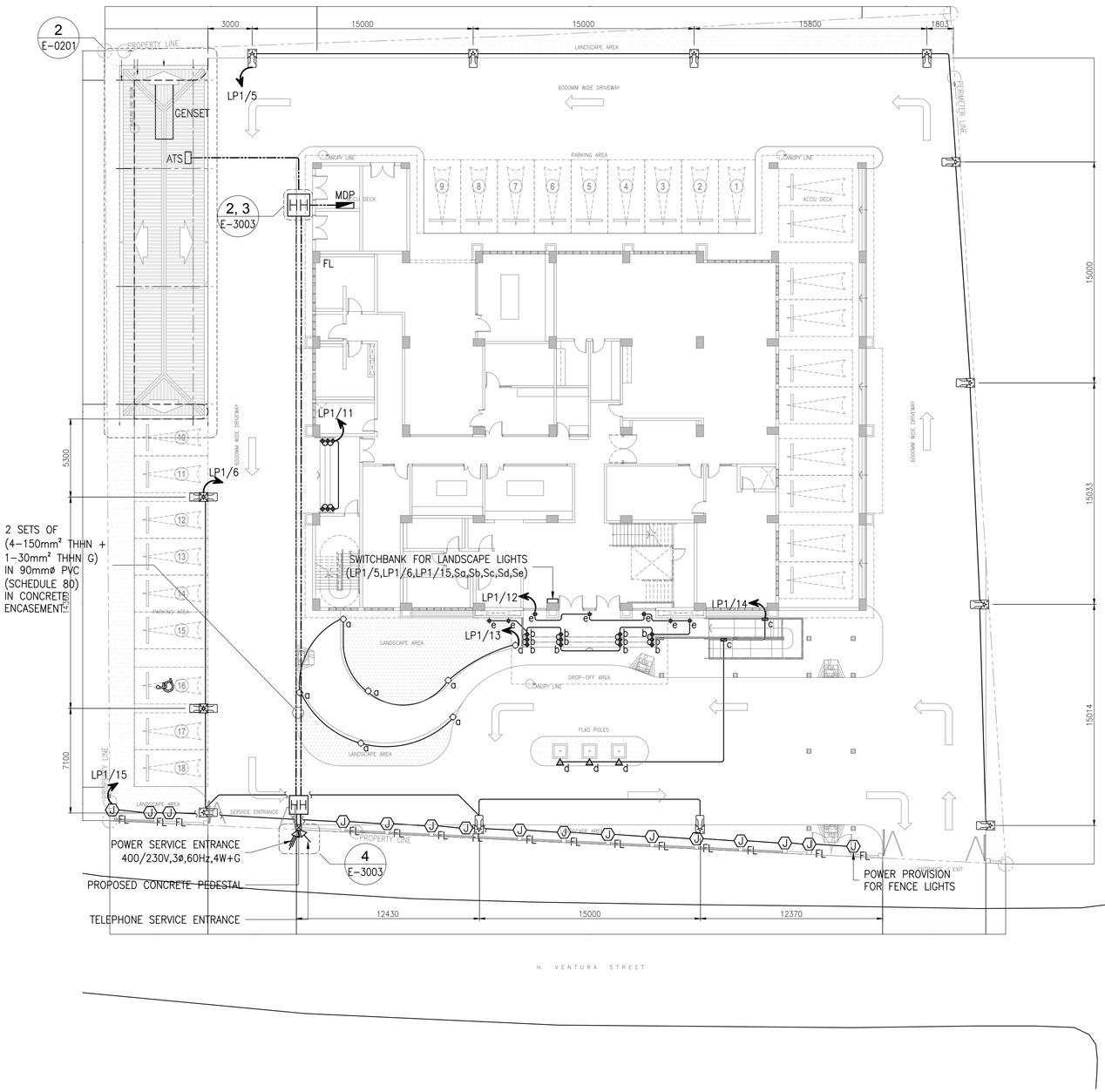

1 E-0301 SITE UTILITIES AND LIGHTING LAYOUT

SCALE 1:200M

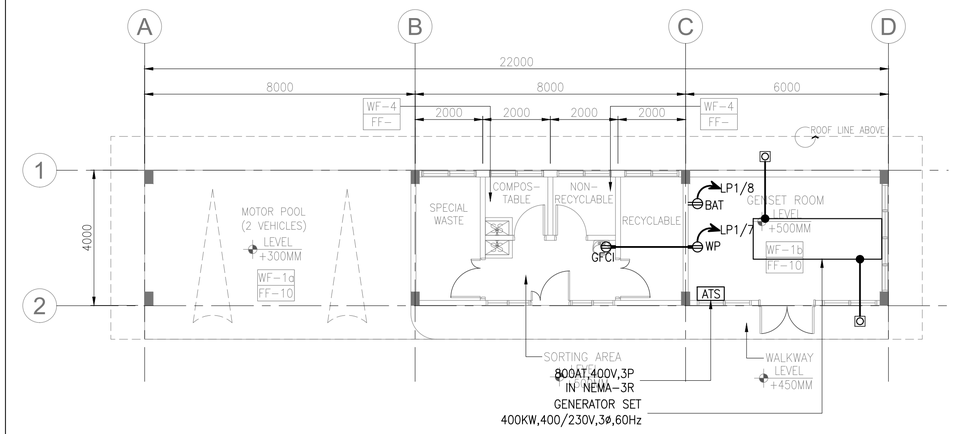

2 E-0301 AUXILIARY POWER LAYOUT

SCALE 1:100M

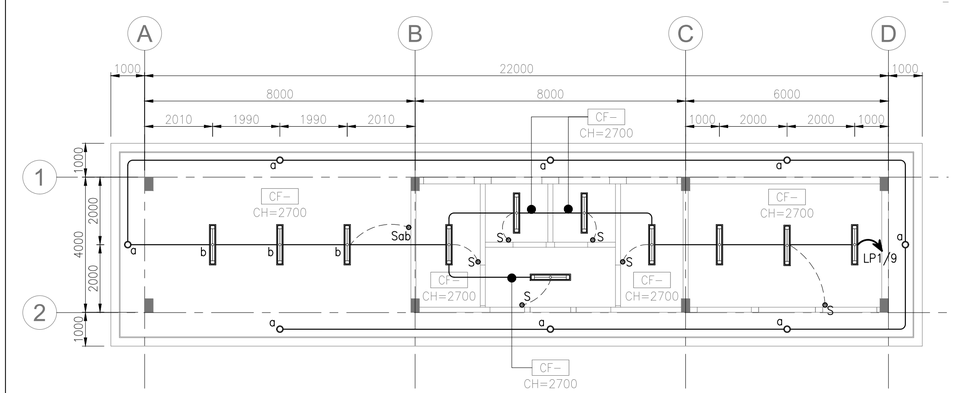

3 E-0301 AUXILIARY LIGHTING LAYOUT

SCALE 1:100M

a.c.ong CONSULTING INC. Engineering + Management ISO 9001:2015 Certified 2F LTA Building 118 Perea Street, Legaspi Village, 1229 Makati City, Philippines Tel. Nos.: +63 2 8935827 Fax No.: +63 2 8935829 Email: acoconsulting@aco.com.ph Website: www.aco.com.ph	CERTIFIED BY RODEL JOSELITO B. MANABAT PROFESSIONAL ELECTRICAL ENGINEER	REG. NO.: 3402 TIN NO. : 158-336-047 PTR NO. : 2733331 DATE : JANUARY 23, 2018 PLACE : MANDALUYONG CITY	OWNER METROPOLITAN WATERWORKS AND SEWERAGE SYSTEM REGULATORY OFFICE MWSS COMPOUND, KATIPUNAN AVENUE, MATANDANG BALARA, QUEZON CITY	PROJECT TITLE/LOCATION 3-STOREY OFFICE BUILDING WITH ROOF DECK MWSS COMPOUND, KATIPUNAN AVENUE, MATANDANG BALARA, QUEZON CITY	CLIENT PROJECT PROPONENT MELCHOR S. CORDOVA ALTERNATE END-USER FOR RO BUILDING	APPROVED BY: PATRICK LESTER N. TY CHIEF REGULATOR, MWSS RO	SHEET CONTENTS SITE UTILITIES AND LIGHTING LAYOUT AUXILIARY POWER LAYOUT & LIGHTING LAYOUT	R.A. 9266 SEC. 33 DRAWINGS AND SPECIFICATIONS AND CONTRACT DOCUMENTS DULY SIGNED, STAMPED OR SEALED AS INSTRUMENTS FOR SERVICE ARE THE INTELLECTUAL PROPERTY AND DOCUMENTS OF ARCHITECT, WHETHER THE OBJECT FOR WHICH THEY ARE MADE IS EXECUTED OR NOT. IT SHALL BE UNLAWFUL FOR ANY PERSON TO DUPLICATE OR TO MAKE COPIES OF SAID DOCUMENTS FOR USE IN THE REPETITION OF AND FOR OTHER PROJECTS OR BUILDINGS, WHETHER EXECUTED PARTLY OR IN WHOLE, WITHOUT THE WRITTEN CONSENT OF THE ARCHITECT OR AUTHOR OF SAID DOCUMENTS.	CADD AVL DESIGNED RRVP APPROVED RJBM	DATE JUL 2018 DATE JUL 2018 DATE JUL 2018	NO.	REVISIONS	CHK	DATE	PAPER SIZE 20X30 SCALE AS SHOWN	SHEET NO. E-0301 PROJECT NO. SO-G-17-036

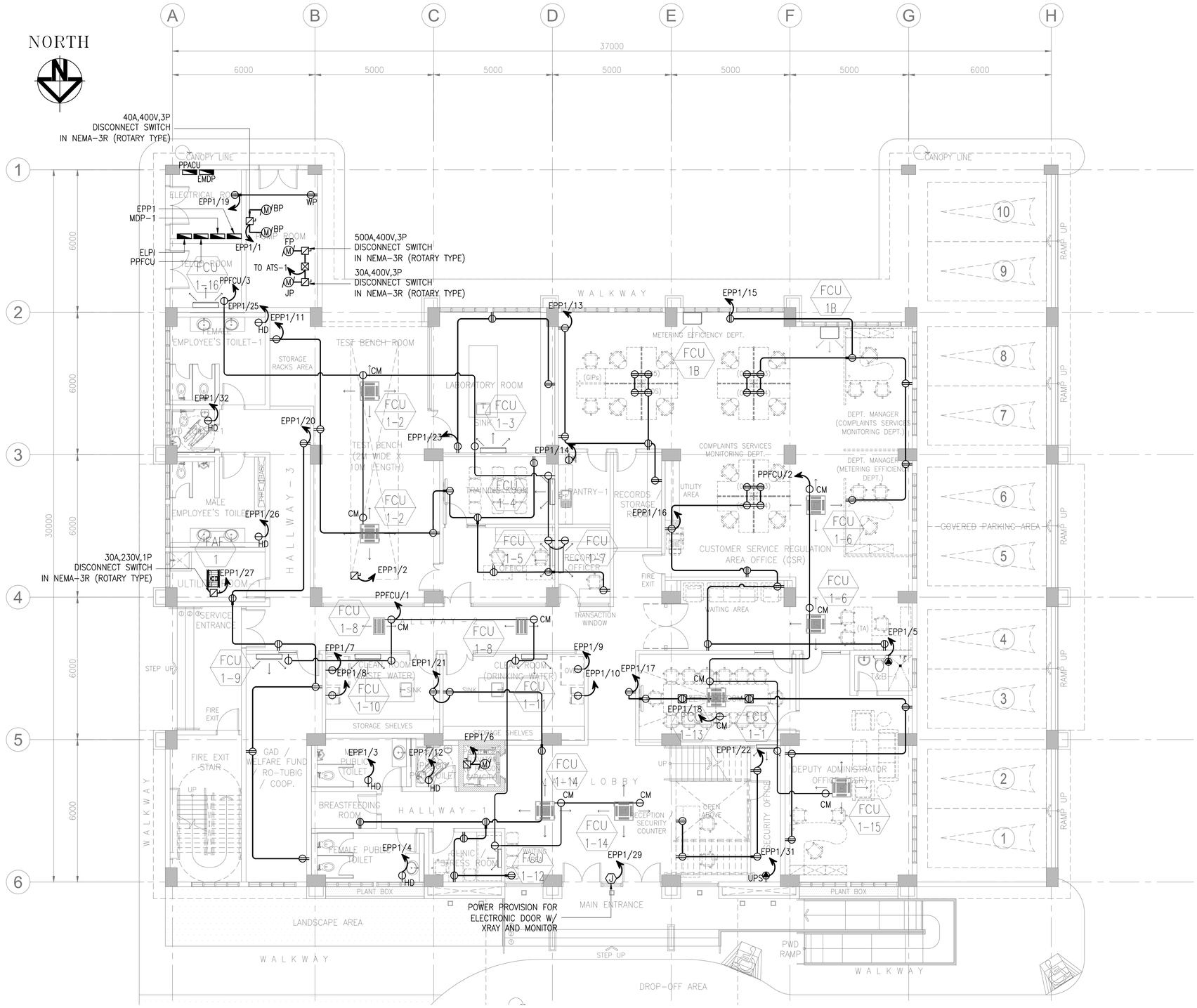

GROUND FLOOR POWER LAYOUT

I / E-0302 SCALE 1:100M

a.c.ong CONSULTING INC. Engineering + Management ISO 9001:2015 Certified 2F LTA Building 118 Perea Street, Legaspi Village, 1229 Makati City, Philippines Tel. Nos.: +63 2 8935827 Fax No.: +63 2 8935829 Email: acoconsulting@aco.com.ph Website: www.aco.com.ph	CERTIFIED BY RODEL JOSELITO B. MANABAT PROFESSIONAL ELECTRICAL ENGINEER	REG. NO.: 3402 TIN NO. : 158-336-047 PTR NO. : 2733331 DATE : JANUARY 23, 2018 PLACE : MANDALUYONG CITY	OWNER METROPOLITAN WATERWORKS AND SEWERAGE SYSTEM REGULATORY OFFICE MWSS COMPOUND, KATIPUNAN AVENUE, MATANDANG BALARA, QUEZON CITY	PROJECT TITLE/LOCATION 3-STOREY OFFICE BUILDING WITH ROOF DECK MWSS COMPOUND, KATIPUNAN AVENUE, MATANDANG BALARA, QUEZON CITY	CLIENT PROJECT PROPONENT MELCHOR S. CORDOVA ALTERNATE END-USER FOR RO BUILDING	APPROVED BY: PATRICK LESTER N. TY CHIEF REGULATOR, MWSS RO	SHEET CONTENTS GROUND FLOOR POWER LAYOUT	R.A. 9266 SEC. 33 DRAWINGS AND SPECIFICATIONS AND CONTRACT DOCUMENTS DULY SIGNED, STAMPED OR SEALED AS INSTRUMENTS FOR SERVICE ARE THE INTELLECTUAL PROPERTY AND DOCUMENTS OF ARCHITECT, WHETHER THE OBJECT FOR WHICH THEY ARE MADE IS EXECUTED OR NOT. IT SHALL BE UNLAWFUL FOR ANY PERSON TO DUPLICATE OR TO MAKE COPIES OF SAID DOCUMENTS FOR USE IN THE REPETITION OF AND FOR OTHER PROJECTS OR BUILDINGS, WHETHER EXECUTED PARTLY OR IN WHOLE, WITHOUT THE WRITTEN CONSENT OF THE ARCHITECT OR AUTHOR OF SAID DOCUMENTS.	CADD AVL JUL 2018 DESIGNED DATE RRVP JUL 2018 APPROVED DATE RJBM JUL 2018	NO. / REVISIONS / CHK / DATE	PAPER SIZE 20X30 SCALE AS SHOWN	SHEET NO. E-0302 PROJECT NO. SO-G-17-036

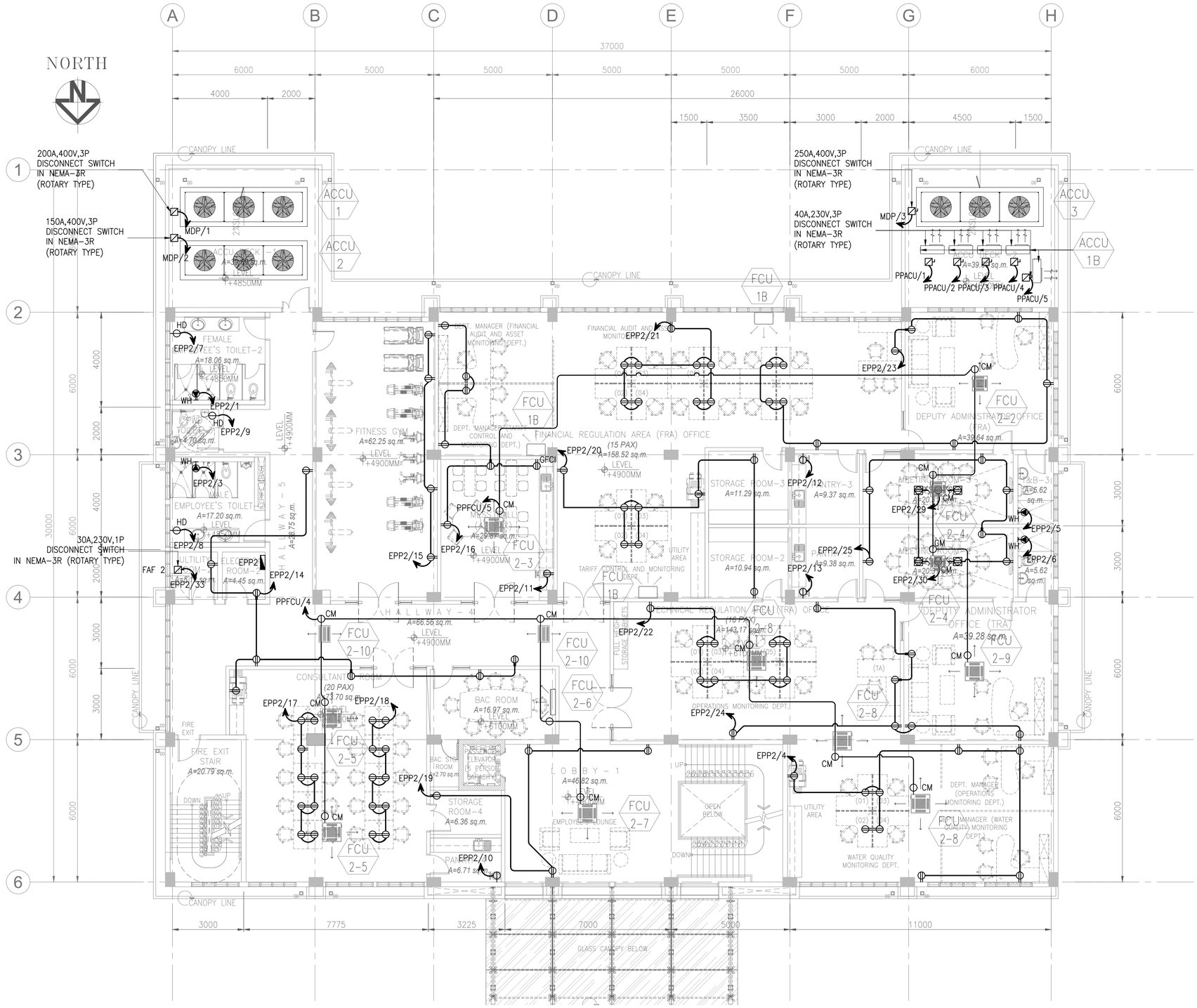

SECOND FLOOR POWER LAYOUT

I / E-0303

SCALE 1:100M

a.C.ONG CONSULTING INC. Engineering + Management ISO 9001:2015 Certified 2F LTA Building 118 Perea Street, Legaspi Village, 1229 Makati City, Philippines Tel. Nos.: +63 2 8935827 Fax No.: +63 2 8935829 Email: acoconsulting@aco.com.ph Website: www.aco.com.ph	CERTIFIED BY RODEL JOSELITO B. MANABAT PROFESSIONAL ELECTRICAL ENGINEER	REG. NO.: 3402 TIN NO. : 158-336-047 PTR NO. : 2733331 DATE : JANUARY 23, 2018 PLACE : MANDALUYONG CITY	OWNER METROPOLITAN WATERWORKS AND SEWERAGE SYSTEM REGULATORY OFFICE MWSS COMPOUND, KATIPUNAN AVENUE, MATANDANG BALARA, QUEZON CITY	PROJECT TITLE/LOCATION 3-STOREY OFFICE BUILDING WITH ROOF DECK MWSS COMPOUND, KATIPUNAN AVENUE, MATANDANG BALARA, QUEZON CITY	CLIENT PROJECT PROPONENT MELCHOR S. CORDOVA ALTERNATE END-USER FOR RO BUILDING	APPROVED BY: PATRICK LESTER N. TY CHIEF REGULATOR, MWSS RO	SHEET CONTENTS SECOND FLOOR POWER LAYOUT	R.A. 9266 SEC. 33 DRAWINGS AND SPECIFICATIONS AND CONTRACT DOCUMENTS DULY SIGNED, STAMPED OR SEALED AS INSTRUMENTS FOR SERVICE ARE THE INTELLECTUAL PROPERTY AND DOCUMENTS OF ARCHITECT, WHETHER THE OBJECT FOR WHICH THEY ARE MADE IS EXECUTED OR NOT. IT SHALL BE UNLAWFUL FOR ANY PERSON TO DUPLICATE OR TO MAKE COPIES OF SAID DOCUMENTS FOR USE IN THE REPETITION OF AND FOR OTHER PROJECTS OR BUILDINGS, WHETHER EXECUTED PARTLY OR IN WHOLE, WITHOUT THE WRITTEN CONSENT OF THE ARCHITECT OR AUTHOR OF SAID DOCUMENTS.	CADD AVL DESIGNED RRVP APPROVED RJBM	DATE JUL 2018 DATE JUL 2018 DATE JUL 2018	NO.	REVISIONS	CHK	DATE	PAPER SIZE 20X30 SCALE AS SHOWN	SHEET NO. E-0303 PROJECT NO. SO-G-17-036

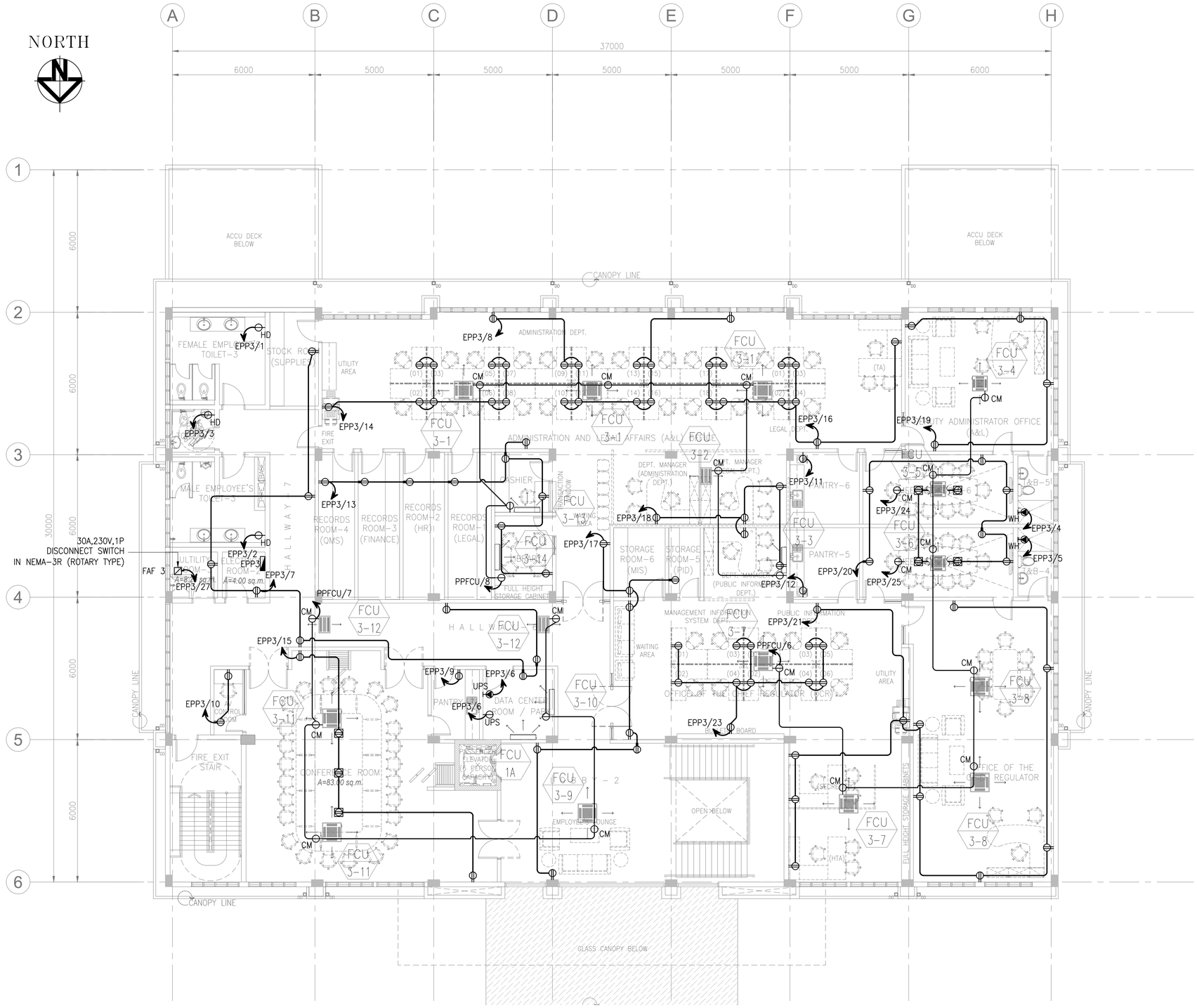

THIRD FLOOR POWER LAYOUT

1 / E-0304

SCALE 1:100M

a.C.ONG CONSULTING INC.
Engineering + Management
ISO 9001:2015 Certified
2F LTA Building 118 Perea Street, Legaspi Village, 1229 Makati City, Philippines
Tel. Nos.: +63 2 8935827 Fax No.: +63 2 8935829
Email: acoconsulting@aco.com.ph Website: www.aco.com.ph

CERTIFIED BY

RODEL JOSELITO B. MANABAT
PROFESSIONAL ELECTRICAL ENGINEER

REG. NO.: 3402
TIN NO. : 158-336-047
PTR NO. : 2733331
DATE : JANUARY 23, 2018
PLACE : MANDALUYONG CITY

OWNER: METROPOLITAN WATERWORKS AND SEWERAGE SYSTEM REGULATORY OFFICE
MWSS COMPOUND, KATIPUNAN AVENUE, MATANDANG BALARA, QUEZON CITY

PROJECT TITLE/LOCATION: 3-STOREY OFFICE BUILDING WITH ROOF DECK
MWSS COMPOUND, KATIPUNAN AVENUE, MATANDANG BALARA, QUEZON CITY

CLIENT
PROJECT PROPONENT: MELCHOR S. CORDOVA, ALTERNATE END-USER FOR RO BUILDING
APPROVED BY: PATRICK LESTER N. TY, CHIEF REGULATOR, MWSS RO

SHEET CONTENTS: THIRD FLOOR POWER LAYOUT

R.A. 9266 SEC. 33
DRAWINGS AND SPECIFICATIONS AND CONTRACT DOCUMENTS DULY SIGNED, STAMPED OR SEALED AS INSTRUMENTS FOR SERVICE ARE THE INTELLECTUAL PROPERTY AND DOCUMENTS OF ARCHITECT, WHETHER THE OBJECT FOR WHICH THEY ARE MADE IS EXECUTED OR NOT. IT SHALL BE UNLAWFUL FOR ANY PERSON TO DUPLICATE OR TO MAKE COPIES OF SAID DOCUMENTS FOR USE IN THE REPETITION OF AND FOR OTHER PROJECTS OR BUILDINGS, WHETHER EXECUTED PARTLY OR IN WHOLE, WITHOUT THE WRITTEN CONSENT OF THE ARCHITECT OR AUTHOR OF SAID DOCUMENTS.

CADD	DATE	NO.	REVISIONS	CHK	DATE	PAPER SIZE	SHEET NO.
AVL	JUL 2018					20X30	E-0304
DESIGNED	DATE					SCALE	PROJECT NO.
RRVP	JUL 2018					AS SHOWN	SO-G-17-036
APPROVED	DATE						
RJBM	JUL 2018						

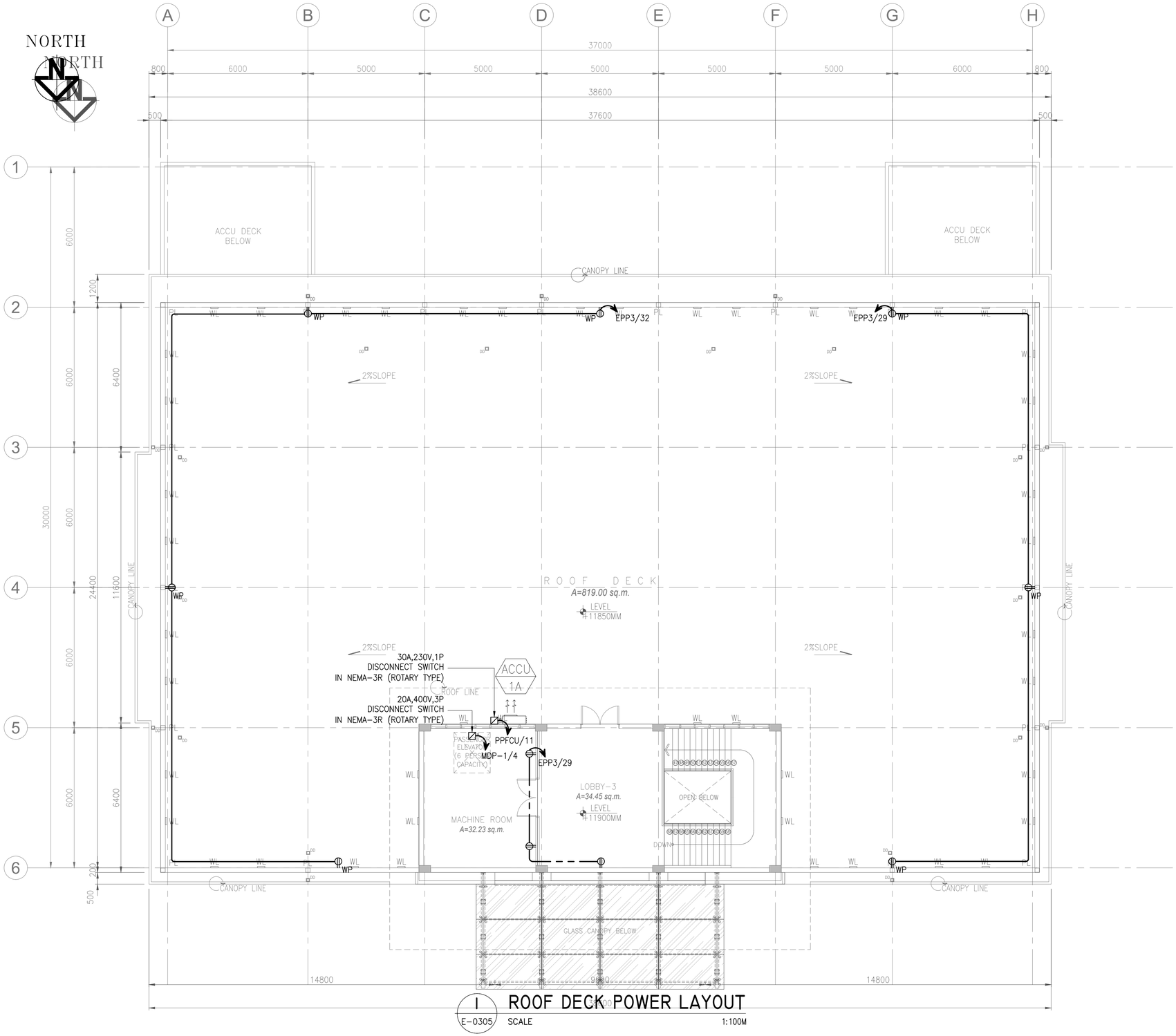

1 ROOF DECK POWER LAYOUT

E-0305 SCALE 1:100M

a.c.ong CONSULTING INC. Engineering + Management ISO 9001:2015 Certified 2F LTA Building 118 Perea Street, Legaspi Village, 1229 Makati City, Philippines Tel. Nos.: +63 2 8935827 Fax No.: +63 2 8935829 Email: acoconsulting@aco.com.ph Website: www.aco.com.ph	CERTIFIED BY RODEL JOSELITO B. MANABAT PROFESSIONAL ELECTRICAL ENGINEER	REG. NO.: 3402 TIN NO. : 158-336-047 PTR NO. : 2733331 DATE : JANUARY 23, 2018 PLACE : MANDALUYONG CITY	OWNER METROPOLITAN WATERWORKS AND SEWERAGE SYSTEM REGULATORY OFFICE MWSS COMPOUND, KATIPUNAN AVENUE, MATANDANG BALARA, QUEZON CITY	PROJECT TITLE/LOCATION 3-STOREY OFFICE BUILDING WITH ROOF DECK MWSS COMPOUND, KATIPUNAN AVENUE, MATANDANG BALARA, QUEZON CITY	CLIENT PROJECT PROPONENT MELCHOR S. CORDOVA ALTERNATE END-USER FOR RO BUILDING	APPROVED BY: PATRICK LESTER N. TY CHIEF REGULATOR, MWSS RO	SHEET CONTENTS ROOF DECK POWER LAYOUT	R.A. 9266 SEC. 33 DRAWINGS AND SPECIFICATIONS AND CONTRACT DOCUMENTS DULY SIGNED, STAMPED OR SEALED AS INSTRUMENTS FOR SERVICE ARE THE INTELLECTUAL PROPERTY AND DOCUMENTS OF ARCHITECT, WHETHER THE OBJECT FOR WHICH THEY ARE MADE IS EXECUTED OR NOT. IT SHALL BE UNLAWFUL FOR ANY PERSON TO DUPLICATE OR TO MAKE COPIES OF SAID DOCUMENTS FOR USE IN THE REPETITION OF AND FOR OTHER PROJECTS OR BUILDINGS, WHETHER EXECUTED PARTLY OR IN WHOLE, WITHOUT THE WRITTEN CONSENT OF THE ARCHITECT OR AUTHOR OF SAID DOCUMENTS.	CADD AVL DESIGNED RRVP APPROVED RJBM	DATE JUL 2018 DATE JUL 2018 DATE JUL 2018	NO.	REVISIONS	CHK	DATE	PAPER SIZE 20X30 SCALE AS SHOWN	SHEET NO. E-0305 PROJECT NO. SO-G-17-036

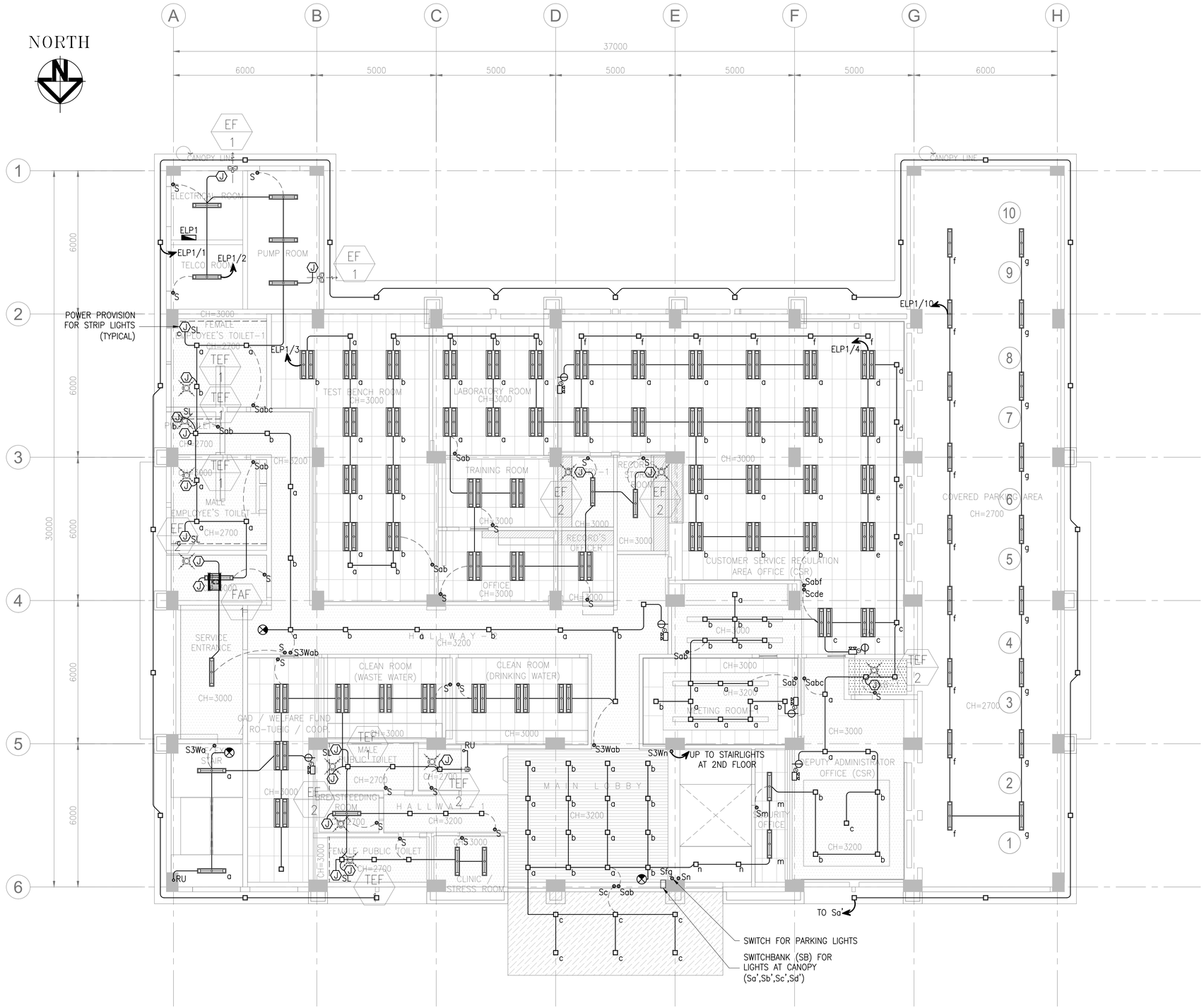

GROUND FLOOR LIGHTING LAYOUT

I / E-0401

SCALE 1:100M

a.c.ONG CONSULTING INC. Engineering + Management ISO 9001:2015 Certified 2F LTA Building 118 Perea Street, Legaspi Village, 1229 Makati City, Philippines Tel. Nos.: +63 2 8935827 Fax No.: +63 2 8935829 Email: acoconsulting@aco.com.ph Website: www.aco.com.ph	CERTIFIED BY RODEL JOSELITO B. MANABAT PROFESSIONAL ELECTRICAL ENGINEER	REG. NO.: 3402 TIN NO. : 158-336-047 PTR NO. : 2733331 DATE : JANUARY 23, 2018 PLACE : MANDALUYONG CITY	OWNER METROPOLITAN WATERWORKS AND SEWERAGE SYSTEM REGULATORY OFFICE MWSS COMPOUND, KATIPUNAN AVENUE, MATANDANG BALARA, QUEZON CITY	PROJECT TITLE/LOCATION 3-STOREY OFFICE BUILDING WITH ROOF DECK MWSS COMPOUND, KATIPUNAN AVENUE, MATANDANG BALARA, QUEZON CITY	CLIENT PROJECT PROPONENT MELCHOR S. CORDOVA ALTERNATE END-USER FOR RO BUILDING	APPROVED BY: PATRICK LESTER N. TY CHIEF REGULATOR, MWSS RO	SHEET CONTENTS GROUND FLOOR LIGHTING LAYOUT	R.A. 9266 SEC. 33 DRAWINGS AND SPECIFICATIONS AND CONTRACT DOCUMENTS DULY SIGNED, STAMPED OR SEALED AS INSTRUMENTS FOR SERVICE ARE THE INTELLECTUAL PROPERTY AND DOCUMENTS OF ARCHITECT, WHETHER THE OBJECT FOR WHICH THEY ARE MADE IS EXECUTED OR NOT. IT SHALL BE UNLAWFUL FOR ANY PERSON TO DUPLICATE OR TO MAKE COPIES OF SAID DOCUMENTS FOR USE IN THE REPETITION OF AND FOR OTHER PROJECTS OR BUILDINGS, WHETHER EXECUTED PARTLY OR IN WHOLE, WITHOUT THE WRITTEN CONSENT OF THE ARCHITECT OR AUTHOR OF SAID DOCUMENTS.	CADD: AVL JUL 2018 DESIGNED: DATE RRVP JUL 2018 APPROVED: DATE RJBM JUL 2018	NO. / REVISIONS / CHK / DATE	PAPER SIZE: 20X30 SCALE: AS SHOWN	SHEET NO.: E-0401 PROJECT NO.: SO-G-17-036

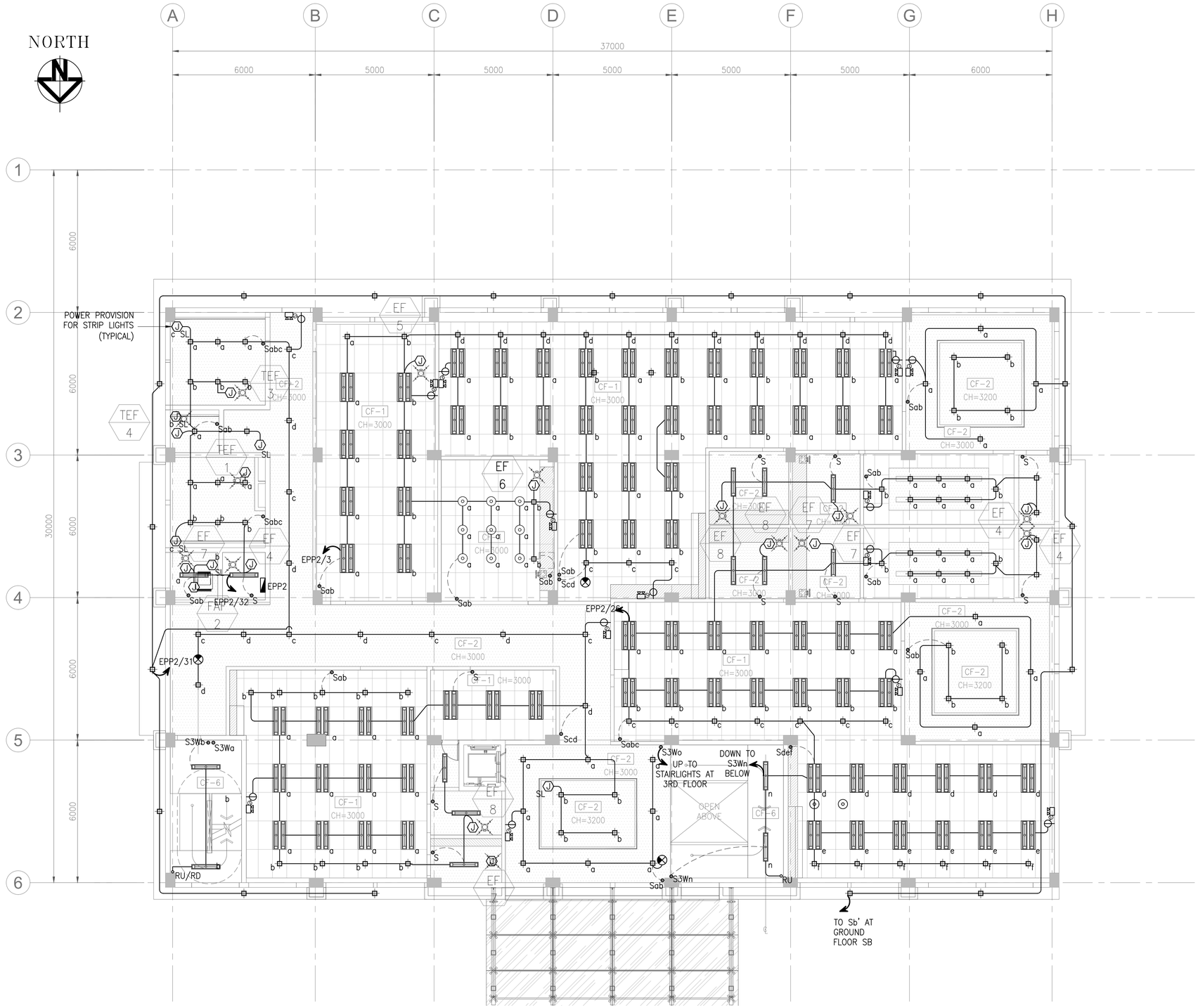

1 SECOND FLOOR LIGHTING LAYOUT

E-0402 SCALE 1:100M

a.C.ONG CONSULTING INC.
Engineering + Management
ISO 9001:2015 Certified
2F LTA Building 118 Perea Street, Legaspi Village, 1229 Makati City, Philippines
Tel. Nos.: +63 2 8935827 Fax No.: +63 2 8935829
Email: acoconsulting@aco.com.ph Website: www.aco.com.ph

CERTIFIED BY
RODEL JOSELITO B. MANABAT
PROFESSIONAL ELECTRICAL ENGINEER
REG. NO.: 3402
TIN NO. : 158-336-047
PTR NO. : 2733331
DATE : JANUARY 23, 2018
PLACE : MANDALUYONG CITY

OWNER
METROPOLITAN WATERWORKS AND SEWERAGE SYSTEM REGULATORY OFFICE
MWSS COMPOUND, KATIPUNAN AVENUE, MATANDANG BALARA, QUEZON CITY

PROJECT TITLE/LOCATION
3-STOREY OFFICE BUILDING WITH ROOF DECK
MWSS COMPOUND, KATIPUNAN AVENUE, MATANDANG BALARA, QUEZON CITY

CLIENT
PROJECT PROPONENT
MELCHOR S. CORDOVA
ALTERNATE END-USER FOR RO BUILDING

APPROVED BY:
PATRICK LESTER N. TY
CHIEF REGULATOR, MWSS RO

SHEET CONTENTS
SECOND FLOOR LIGHTING LAYOUT

R.A. 9266 SEC. 33
DRAWINGS AND SPECIFICATIONS AND CONTRACT DOCUMENTS DULY SIGNED, STAMPED OR SEALED AS INSTRUMENTS FOR SERVICE ARE THE INTELLECTUAL PROPERTY AND DOCUMENTS OF ARCHITECT, WHETHER THE OBJECT FOR WHICH THEY ARE MADE IS EXECUTED OR NOT. IT SHALL BE UNLAWFUL FOR ANY PERSON TO DUPLICATE OR TO MAKE COPIES OF SAID DOCUMENTS FOR USE IN THE REPETITION OF AND FOR OTHER PROJECTS OR BUILDINGS, WHETHER EXECUTED PARTLY OR IN WHOLE, WITHOUT THE WRITTEN CONSENT OF THE ARCHITECT OR AUTHOR OF SAID DOCUMENTS.

CADD	DATE	NO.	REVISIONS	CHK	DATE
AVL	JUL 2018				
DESIGNED	DATE				
RRVP	JUL 2018				
APPROVED	DATE				
RJBM	JUL 2018				

PAPER SIZE	SHEET NO.
20X30	E-0402
SCALE	PROJECT NO.
AS SHOWN	SO-G-17-036

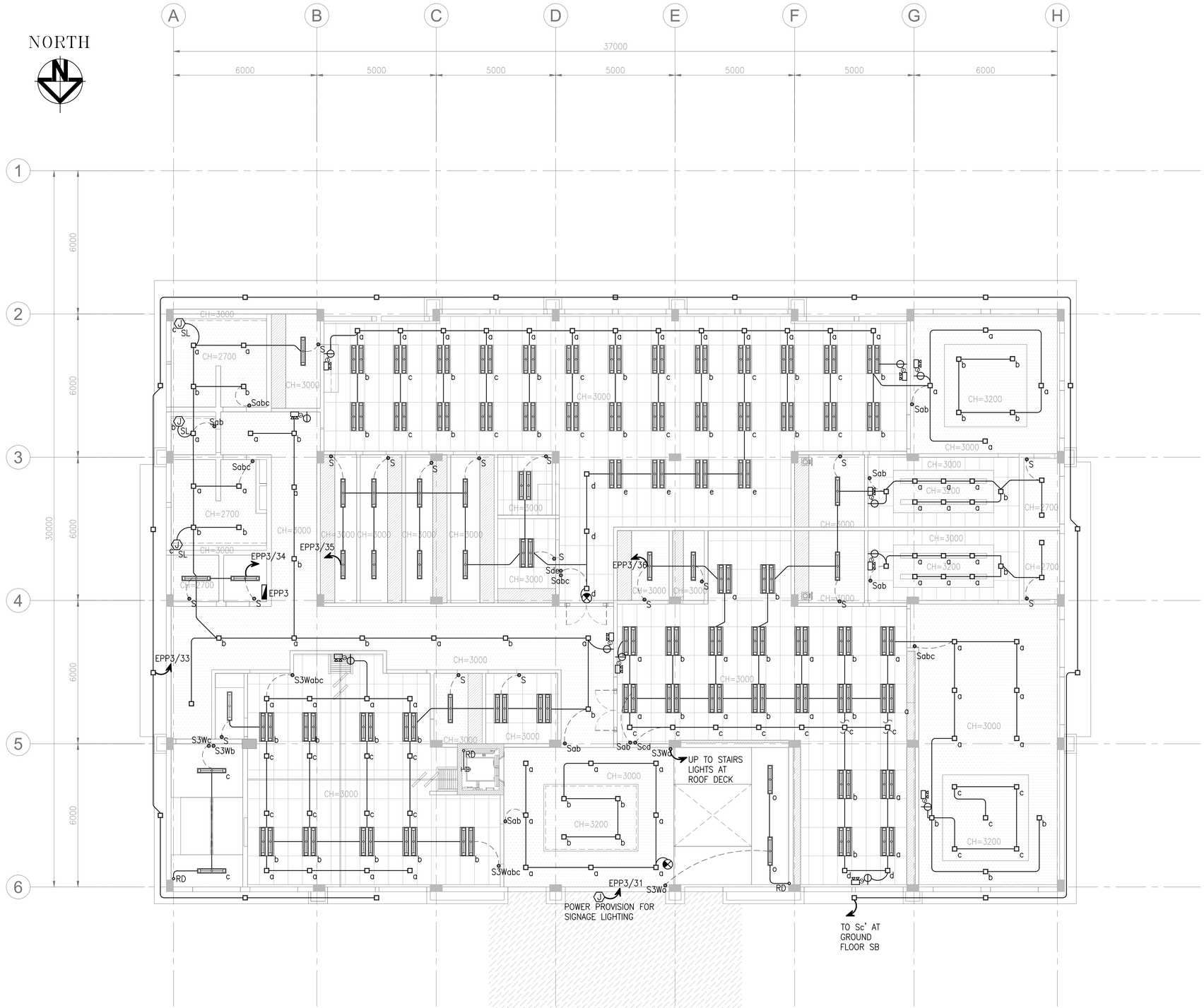

I THIRD FLOOR LIGHTING LAYOUT

E-0403 SCALE 1:100M

a.c.ONG CONSULTING INC. Engineering + Management ISO 9001:2015 Certified 2F LTA Building 118 Perea Street, Legaspi Village, 1229 Makati City, Philippines Tel. Nos.: +63 2 8935827 Fax No.: +63 2 8935829 Email: acoconsulting@aco.com.ph Website: www.aco.com.ph	CERTIFIED BY RODEL JOSELITO B. MANABAT PROFESSIONAL ELECTRICAL ENGINEER	REG. NO.: 3402 TIN NO. : 158-336-047 PTR NO. : 2733331 DATE : JANUARY 23, 2018 PLACE : MANDALUYONG CITY	OWNER METROPOLITAN WATERWORKS AND SEWERAGE SYSTEM REGULATORY OFFICE MWSS COMPOUND, KATIPUNAN AVENUE, MATANDANG BALARA, QUEZON CITY	PROJECT TITLE/LOCATION 3-STOREY OFFICE BUILDING WITH ROOF DECK MWSS COMPOUND, KATIPUNAN AVENUE, MATANDANG BALARA, QUEZON CITY	CLIENT PROJECT PROPONENT MELCHOR S. CORDOVA ALTERNATE END-USER FOR RO BUILDING	APPROVED BY: PATRICK LESTER N. TY CHIEF REGULATOR, MWSS RO	SHEET CONTENTS THIRD FLOOR LIGHTING LAYOUT

R.A. 9266 SEC. 33
DRAWINGS AND SPECIFICATIONS AND CONTRACT DOCUMENTS DULY SIGNED, STAMPED OR SEALED AS INSTRUMENTS FOR SERVICE ARE THE INTELLECTUAL PROPERTY AND DOCUMENTS OF ARCHITECT, WHETHER THE OBJECT FOR WHICH THEY ARE MADE IS EXECUTED OR NOT. IT SHALL BE UNLAWFUL FOR ANY PERSON TO DUPLICATE OR TO MAKE COPIES OF SAID DOCUMENTS FOR USE IN THE REPETITION OF AND FOR OTHER PROJECTS OR BUILDINGS, WHETHER EXECUTED PARTLY OR IN WHOLE, WITHOUT THE WRITTEN CONSENT OF THE ARCHITECT OR AUTHOR OF SAID DOCUMENTS.

CADD	DATE	NO.	REVISIONS	CHK	DATE	PAPER SIZE	SHEET NO.
AVL	JUL 2018					20X30	E-0403
DESIGNED	DATE					SCALE	PROJECT NO.
RRVP	JUL 2018					AS SHOWN	SO-G-17-036
APPROVED	DATE						
RJBM	JUL 2018						

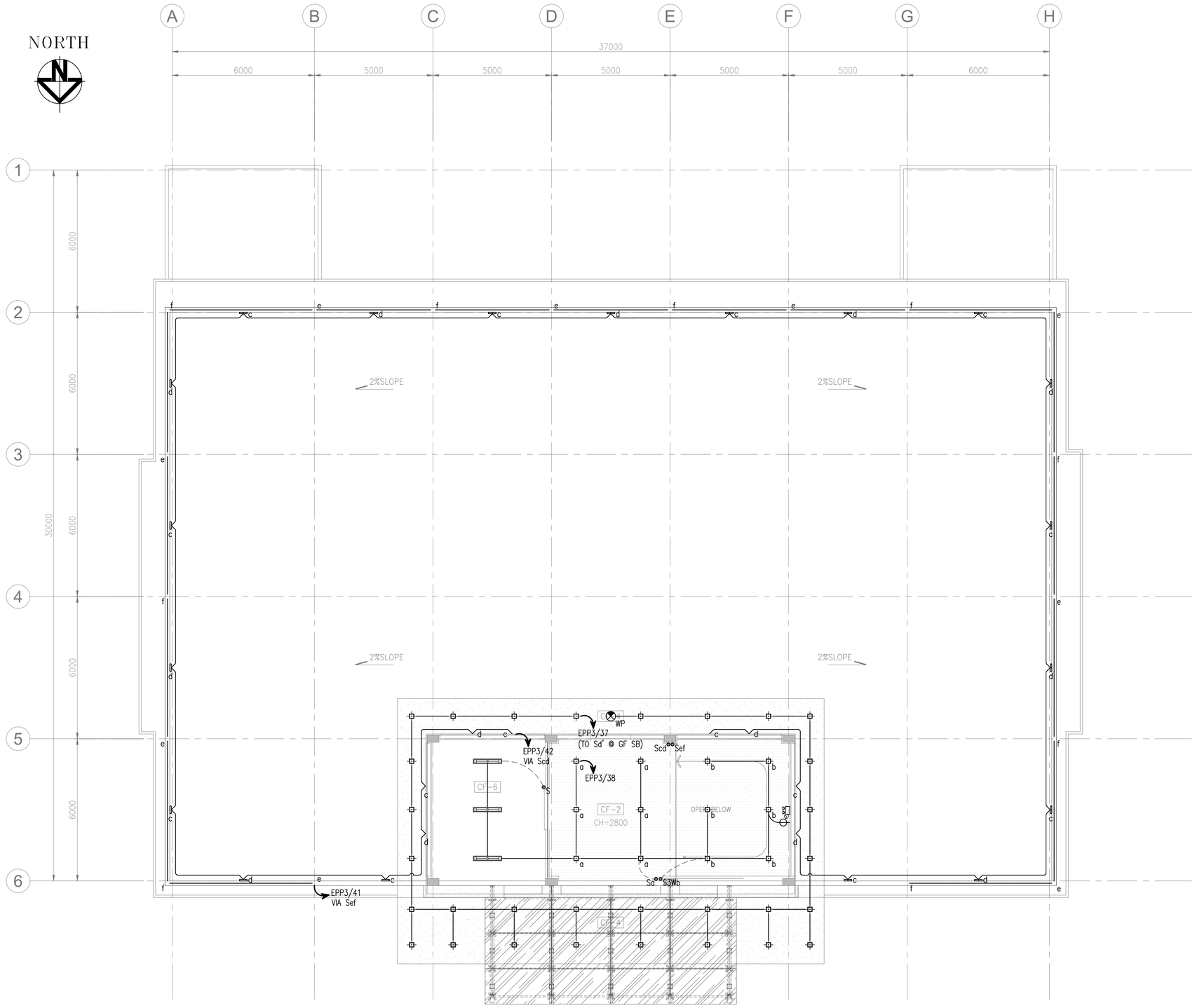

I ROOF DECK LIGHTING LAYOUT

E-0404 SCALE 1:100M

a.C.ONG CONSULTING INC. Engineering + Management ISO 9001:2015 Certified 2F LTA Building 118 Perea Street, Legaspi Village, 1229 Makati City, Philippines Tel. Nos.: +63 2 8935827 Fax No.: +63 2 8935829 Email: acoconsulting@aco.com.ph Website: www.aco.com.ph	CERTIFIED BY RODEL JOSELITO B. MANABAT PROFESSIONAL ELECTRICAL ENGINEER	REG. NO.: 3402 TIN NO. : 158-336-047 PTR NO. : 2733331 DATE : JANUARY 23, 2018 PLACE : MANDALUYONG CITY	OWNER METROPOLITAN WATERWORKS AND SEWERAGE SYSTEM REGULATORY OFFICE MWSS COMPOUND, KATIPUNAN AVENUE, MATANDANG BALARA, QUEZON CITY	PROJECT TITLE/LOCATION 3-STOREY OFFICE BUILDING WITH ROOF DECK MWSS COMPOUND, KATIPUNAN AVENUE, MATANDANG BALARA, QUEZON CITY	CLIENT PROJECT PROPONENT MELCHOR S. CORDOVA ALTERNATE END-USER FOR RO BUILDING	APPROVED BY: PATRICK LESTER N. TY CHIEF REGULATOR, MWSS RO	SHEET CONTENTS ROOF DECK LIGHTING LAYOUT	R.A. 9266 SEC. 33 DRAWINGS AND SPECIFICATIONS AND CONTRACT DOCUMENTS DULY SIGNED, STAMPED OR SEALED AS INSTRUMENTS FOR SERVICE ARE THE INTELLECTUAL PROPERTY AND DOCUMENTS OF ARCHITECT, WHETHER THE OBJECT FOR WHICH THEY ARE MADE IS EXECUTED OR NOT. IT SHALL BE UNLAWFUL FOR ANY PERSON TO DUPLICATE OR TO MAKE COPIES OF SAID DOCUMENTS FOR USE IN THE REPETITION OF AND FOR OTHER PROJECTS OR BUILDINGS, WHETHER EXECUTED PARTLY OR IN WHOLE, WITHOUT THE WRITTEN CONSENT OF THE ARCHITECT OR AUTHOR OF SAID DOCUMENTS.	CADD AVL DESIGNED RRVP APPROVED RJBM	DATE JUL 2018 DATE JUL 2018 DATE JUL 2018	NO.	REVISIONS	CHK	DATE	PAPER SIZE 20X30 SCALE AS SHOWN	SHEET NO. E-0404 PROJECT NO. SO-G-17-036

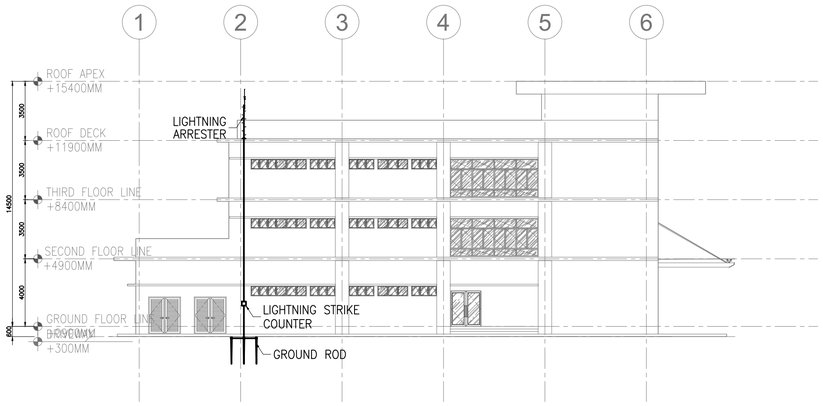

1 LIGHTNING PROTECTION SYSTEM RISER DIAGRAM

E-0501 SCALE 1:200M

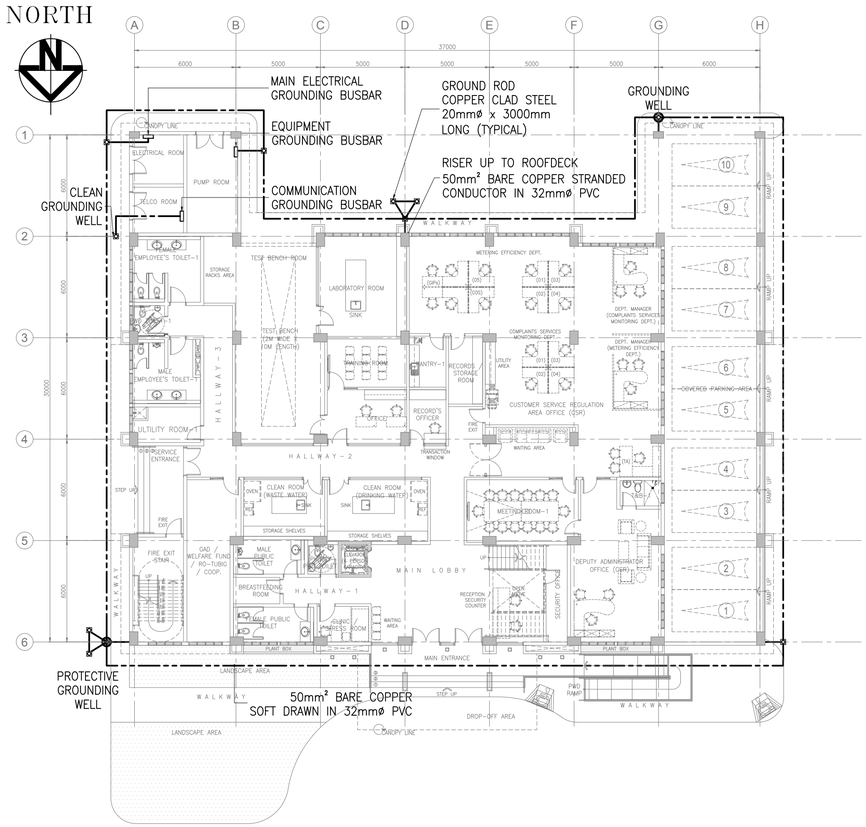

2 GROUND FLOOR LIGHTNING PROTECTION SYSTEM LAYOUT

E-0501 SCALE 1:200M

3 ROOF DECK LIGHTNING PROTECTION SYSTEM LAYOUT

E-0501 SCALE 1:200M

a.c.ong CONSULTING INC.
Engineering + Management
ISO 9001:2015 Certified
2F LTA Building 118 Perea Street, Legaspi Village, 1229 Makati City, Philippines
Tel. Nos.: +63 2 8935827 Fax No.: +63 2 8935829
Email: acoconsulting@aco.com.ph Website: www.aco.com.ph

CERTIFIED BY		OWNER	PROJECT TITLE/LOCATION	CLIENT		SHEET CONTENTS
RODEL JOSELITO B. MANABAT PROFESSIONAL ELECTRICAL ENGINEER	REG. NO.: 3402 TIN NO. : 158-336-047 PTR NO. : 2733331 DATE : JANUARY 23, 2018 PLACE : MANDALUYONG CITY	METROPOLITAN WATERWORKS AND SEWERAGE SYSTEM REGULATORY OFFICE MWSS COMPOUND, KATIPUNAN AVENUE, MATANDANG BALARA, QUEZON CITY	3-STOREY OFFICE BUILDING WITH ROOF DECK MWSS COMPOUND, KATIPUNAN AVENUE, MATANDANG BALARA, QUEZON CITY	PROJECT PROPONENT MELCHOR S. CORDOVA ALTERNATE END-USER FOR RO BUILDING	APPROVED BY: PATRICK LESTER N. TY CHIEF REGULATOR, MWSS RO	LIGHTNING PROTECTION SYSTEM RISER DIAGRAM, GROUND FLOOR GROUNDING AND LIGHTNING PROTECTION SYSTEM LAYOUT, ROOF DECK LIGHTNING PROTECTION SYSTEM LAYOUT

R.A. 9266 SEC. 33
DRAWINGS AND SPECIFICATIONS AND CONTRACT DOCUMENTS DULY SIGNED, STAMPED OR SEALED AS INSTRUMENTS FOR SERVICE ARE THE INTELLECTUAL PROPERTY AND DOCUMENTS OF ARCHITECT, WHETHER THE OBJECT FOR WHICH THEY ARE MADE IS EXECUTED OR NOT. IT SHALL BE UNLAWFUL FOR ANY PERSON TO DUPLICATE OR TO MAKE COPIES OF SAID DOCUMENTS FOR USE IN THE REPETITION OF AND FOR OTHER PROJECTS OR BUILDINGS, WHETHER EXECUTED PARTLY OR IN WHOLE, WITHOUT THE WRITTEN CONSENT OF THE ARCHITECT OR AUTHOR OF SAID DOCUMENTS.

CADD	DATE	NO.	REVISIONS	CHK	DATE	PAPER SIZE	SHEET NO.
AVL	JUL 2018					20X30	E-0501
DESIGNED	DATE					SCALE	PROJECT NO.
RRVP	JUL 2018					AS SHOWN	SO-G-17-036
APPROVED	DATE						
RJBM	JUL 2018						

PANELBOARD NAME:	MDP-1	MAIN BREAKER:	AT	AF	POLE	VOLTAGE	TYPE:	CENTER MAIN
			800	800	3	400		

CIRCUIT NO.	VA	VOLTAGE	DEMAND FACTOR	DESCRIPTION	AMPERE Ø AN	AMPERE Ø BN	AMPERE Ø CN	AMPERE 3Ø	POLE	AMPERE TRIP (AT)	AMPERE FRAME (AF)	WIRE CODE
1	52125	400	80%	ACCU 1				75.24	3	200	225	Y80
2	43750	400	80%	ACCU 2				63.15	3	150	225	Y50
3	67500	400	80%	ACCU 3				97.43	3	250	400	Y125
4	5000	400	65%	ELEVATOR				7.22	3	20	50	Y3.5
5	33750	400	100%	PPACU	0.00	0.00	0.00	48.71	3	80	100	Y22
6	170139	400	81%	EMDP	196.34	216.01	193.90	44.31	3	300	400	Y150
7	11448	400	100%	PPFCU	16.84	14.86	18.07	0.00	3	50	50	Y8.0
8		400		TVSS				0.00	3	30	50	Y5.5
9		400		SPARE				0.00	3	50	50	-
10		400		SPARE				0.00	3	50	50	-
	383712			TOTAL	213.18	230.88	211.98	336.06	30			

PANELBOARD DESCRIPTION					
LOCATION:	ELECTRICAL ROOM @ GF	MAIN KAIC:	42 kAIC	FEEDER WIRE SIZE:	3Y125 (SEE WIRING AND CONDUIT CODE)
ENCLOSURE:	NEMA 1	BRANCH KAIC:	22 kAIC	NOTES:	1. USE INDUSTRIAL TYPE CIRCUIT BREAKERS.
MOUNTING:	SURFACE MOUNTED	BUS BRACING:	42 kA		2. PROVIDE GROUND TERMINAL BUS W/ CRIMP LUGS.
VOLTAGE:	400 V	DEM. FACTOR:	83%		3. BUS BARS SHALL BE SILVER PLATED.
AMPERES:	468.22	FED FROM:	POWER UTILITY		4. ALL EQUIPMENT SHALL BE RATED 60Hz.

PANELBOARD NAME:	EMDP	MAIN BREAKER:	AT	AF	POLE	VOLTAGE	TYPE:	CENTER MAIN
			300	400	3	400		

CIRCUIT NO.	VA	VOLTAGE	DEMAND FACTOR	DESCRIPTION	AMPERE Ø AN	AMPERE Ø BN	AMPERE Ø CN	AMPERE 3Ø	POLE	AMPERE TRIP (AT)	AMPERE FRAME (AF)	WIRE CODE
1	75247	400	79%	EPP1	61.52	71.82	60.35	44.31	3	150	225	Y50
2	48020	400	82%	EPP2	66.30	75.18	67.30	0.00	3	100	100	Y30
3	46872	400	82%	EPP3	68.52	69.02	66.25	0.00	3	100	100	Y30
4		400		SPARE				0.00	3	50	50	-
	170139			TOTAL	196.34	216.01	193.90	44.31	12			

PANELBOARD DESCRIPTION					
LOCATION:	ELECTRICAL ROOM @ GF	MAIN KAIC:	22 kAIC	FEEDER WIRE SIZE:	Y150 (SEE WIRING AND CONDUIT CODE)
ENCLOSURE:	NEMA 1	BRANCH KAIC:	22 kAIC	NOTES:	1. USE INDUSTRIAL TYPE CIRCUIT BREAKERS.
MOUNTING:	SURFACE MOUNTED	BUS BRACING:	22 kA		2. PROVIDE GROUND TERMINAL BUS W/ CRIMP LUGS.
VOLTAGE:	400 V	DEM. FACTOR:	81%		3. BUS BARS SHALL BE SILVER PLATED.
AMPERES:	210.77	FED FROM:	MDP-1		4. ALL EQUIPMENT SHALL BE RATED 60Hz.

PANELBOARD NAME:	FIRE PUMP & JOCKEY PUMP (NON-PANEL)	MAIN BREAKER:	AT	AF	POLE	VOLTAGE	TYPE:	CENTER MAIN
			600	600	3	400		

CIRCUIT NO.	VA	VOLTAGE	DEMAND FACTOR	DESCRIPTION	AMPERE Ø AN	AMPERE Ø BN	AMPERE Ø CN	AMPERE 3Ø	POLE	AMPERE TRIP (AT)	AMPERE FRAME (AF)	WIRE CODE
1	71358	400	100%	FIRE PUMP (50 HP)				83.00	3	500	600	Y50
2	2979	400	100%	JOCKEY PUMP (2 HP)				4.30	3	30	50	Y3.5
	74337			TOTAL	0.00	0.00	0.00	87.30	6			

PANELBOARD DESCRIPTION					
LOCATION:	UTILITY RM @ GF	MAIN KAIC:	42 kAIC	FEEDER WIRE SIZE:	Y60 (SEE WIRING AND CONDUIT CODE)
ENCLOSURE:	NEMA 1	BRANCH KAIC:	42 kAIC	NOTES:	
MOUNTING:		BUS BRACING:	42 kA		1. PROVIDE PANEL GROUNDING.
VOLTAGE:	400 V	DEM. FACTOR:	100%		2. ALL EQUIPMENT SHALL BE RATED 60Hz.
AMPERES:	87.30	FED FROM:	ATS		

PANELBOARD NAME:	PPFCU	MAIN BREAKER:	AT	AF	POLE	VOLTAGE	TYPE:	CENTER MAIN
			50	50	3	400		

CIRCUIT NO.	VA	VOLTAGE	DEMAND FACTOR	DESCRIPTION	AMPERE Ø AN	AMPERE Ø BN	AMPERE Ø CN	AMPERE 3Ø	POLE	AMPERE TRIP (AT)	AMPERE FRAME (AF)	WIRE CODE
1	855	230	100%	FCU(1-14,1-12,1-11,1-10,1-8,1-9)	3.72				1	20	50	S3.5
2	839	230	100%	FCU(1-6,1-13,1-1,1-15)	3.65				1	20	50	S3.5
3	1801	230	100%	FCU (1-16,1-2,1-3,1-4,1-5,1-7)		7.83			1	20	50	S3.5
4	1618	230	100%	FCU (2-5,2-6,2-7,2-10,2-8)		7.03			1	20	50	S3.5
5	615	230	100%	FCU (2-2,2-4,2-3,2-9)			2.67		1	20	50	S3.5
6	792	230	100%	FCU(3-4,3-5,3-6,3-7,3-8)			3.44		1	20	50	S3.5
7	1248	230	100%	FCU(3-11,3-9,3-10,3-12)	5.42				1	20	50	S3.5
8	931	230	100%	FCU(3-14,3-13,3-1,3-2,3-3)	4.05				1	20	50	S3.5
9		230		SPARE		0.00			1	20	50	-
10		230		SPARE		0.00			1	20	50	-
11	2750	230	100%	ACCU 1A/FCU 1A			11.96		1	20	50	S5.5
12		230		SPARE			0.00		1	20	50	-
	11448			TOTAL	16.84	14.86	18.07	0.00	12			

PANELBOARD DESCRIPTION					
LOCATION:		MAIN KAIC:	18 kAIC	FEEDER WIRE SIZE:	Y8.0 (SEE WIRING AND CONDUIT CODE)
ENCLOSURE:	NEMA 1	BRANCH KAIC:	10 kAIC	NOTES:	1. USE INDUSTRIAL TYPE CIRCUIT BREAKERS.
MOUNTING:	SURFACE MOUNTED	BUS BRACING:	18 kA		2. PROVIDE GROUND TERMINAL BUS W/ CRIMP LUGS.
VOLTAGE:	400 V	DEM. FACTOR:	100%		3. BUS BARS SHALL BE SILVER PLATED.
AMPERES:	18.07	FED FROM:	MDP-1		4. ALL EQUIPMENT SHALL BE RATED 60Hz.

PANELBOARD NAME:	PPACU	MAIN BREAKER:	AT	AF	POLE	VOLTAGE	TTPE:	CENTER MAIN
			125	225	3	230		

CIRCUIT NO.	VA	VOLTAGE	DEMAND FACTOR	DESCRIPTION	AMPERE Ø AB	AMPERE Ø BC	AMPERE Ø CA	AMPERE 3Ø	POLE	AMPERE TRIP (AT)	AMPERE FRAME (AF)	WIRE CODE
1	6750	230	100%	ACCU 1B				16.94	3	40	50	T5.5
2	6750	230	100%	ACCU 1B				16.94	3	40	50	T5.5
3	6750	230	100%	ACCU 1B				16.94	3	40	50	T5.5
4	6750	230	100%	ACCU 1B				16.94	3	40	50	T8.0
5	6750	230	100%	ACCU 1B				16.94	3	40	50	T8.0
6		230		SPARE				0.00	3	40	50	-
	33750			TOTAL	0.00	0.00	0.00	84.72	18			

PANELBOARD DESCRIPTION					
				FEEDER WIRE SIZE:	T38 (SEE WIRING AND CONDUIT CODE)
LOCATION:	ELECTRICAL ROOM @ 2F	MAIN KAIC:	22 kAIC		
ENCLOSURE:	NEMA 1	BRANCH KAIC:	10 kAIC	NOTES:	1. USE INDUSTRIAL TTPE CIRCUIT BREAKERS.
MOUNTING:	SURFACE MOUNTED	BUS BRACING:	22 kA		2. PROVIDE GROUND TERMINAL BUS W/ CRIMP LUGS.
VOLTAGE:	230 V	DEM. FACTOR:	100%		3. BUS BARS SHALL BE SILVER PLATED.
AMPERES:	84.72	FED FROM:	MDP-1		4. ALL EQUIPMENT SHALL BE RATED 60Hz.

PANELBOARD NAME:	EPP1	MAIN BREAKER:	AT	AF	POLE	VOLTAGE	TYPE:	CENTER MAIN
			150	225	3	400		

CIRCUIT NO.	VA	VOLTAGE	DEMAND FACTOR	DESCRIPTION	AMPERE Ø AN	AMPERE Ø BN	AMPERE Ø CN	AMPERE 3Ø	POLE	AMPERE TRIP (AT)	AMPERE FRAME (AF)	WIRE CODE
1	9699	400	65%	BOOSTER PUMP				14.00	3	40	50	Y8.0
2	21000	400	80%	WATER METER TEST BENCH				30.31	3	80	100	Y22
3	1500	230	65%	HAND DRYER @ FEMALE PUBLIC TOILET	6.52				1	20	50	S3.5
4	1500	230	65%	HAND DRYER @ MALE PUBLIC TOILET	6.52				1	20	50	S3.5
5	3500	230	80%	WATER HEATER @ DEPUTY OFFICE		15.22			1	20	50	S5.5
6	1127	230	80%	ELEVATOR SUMP PIT PUMP		4.90			1	20	50	S3.5
7	2000	230	80%	OVEN @ CLEAN ROOM (WASTE WATER)			8.70		1	20	50	S3.5
8	1000	230	80%	REF @ CLEAN ROOM (WASTE WATER)			4.35		1	20	50	S3.5
9	2000	230	80%	OVEN @ CLEAN ROOM (DRINKING WATER)	8.70				1	20	50	S3.5
10	1000	230	80%	REF @ CLEAN ROOM (DRINKING WATER)	4.35				1	20	50	S3.5
11	1620	230	80%	9 CONVENIENCE OUTLETS @ TEST BENCH, LAB ROOM, TRAINING RM, OFFICE		7.04			1	20	50	S3.5
12	1500	230	65%	HAND DRYER @ PUBLIC PWD		6.52			1	20	50	S3.5
13	1440	230	80%	8 CONVENIENCE OUTLETS @ METERING EFFICIENCY DEPT, RECORDS/STORAGE RM			6.26		1	20	50	S3.5
14	500	230	80%	WATER DISPENSER @ PANTRY - 1			2.17		1	20	50	S3.5
15	1620	230	80%	9 CONVENIENCE OUTLETS @ METERING EFFICIENCY DEPT, DEPT MANAGER OFFICE	7.04				1	20	50	S3.5
16	1620	230	80%	9 CONVENIENCE OUTLETS @ COMPLAINTS SERVICES MONITORING DEPT	7.04				1	20	50	S3.5
17	1260	230	80%	7 CONVENIENCE OUTLETS @ DEPUTY OFFICE		5.48			1	20	50	S3.5
18	500	230	80%	PROJECTOR		2.17			1	20	50	S3.5
19	360	230	80%	2 CONVENIENCE OUTLETS @ ELECTRICAL AND PUMP RM			1.57		1	20	50	S3.5
20	1080	230	80%	6 CONVENIENCE OUTLETS @ GAD/WELFARE FUND/RO-TUBIG/COOP, UTILITY RM			4.70		1	20	50	S3.5
21	1440	230	80%	8 CONVENIENCE OUTLETS @ CLEAN RM, CLINIC	6.26				1	20	50	S3.5
22	720	230	80%	4 CONVENIENCE OUTLETS @ SECURITY OFFICE	3.13				1	20	50	S3.5
23	540	230	80%	3 CONVENIENCE OUTLETS @ LABORATORY		2.35			1	20	50	S3.5
24	5471	230	99%	ELP1		23.79			1	30	50	S5.5
25	1500	230	65%	HAND DRYER @ FEMALE EMPLOYEE'S TOILET			6.52		1	20	50	S3.5
26	1500	230	65%	HAND DRYER @ MALE EMPLOYEE'S TOILET			6.52		1	20	50	S3.5
27		230		SPARE	0.00				1	20	50	-
28		230		SPARE	0.00				1	20	50	-
29	1000	230	100%	POWER PROVISION FOR ELECTRONIC DOOR WITH XRAY AND MONITOR		4.35			1	20	50	S3.5
30		230		SPARE		0.00			1	20	50	-
31	3000	230	100%	UPS			13.04		1	20	50	S5.5
32	1500	230	65%	HAND DRYER @ PWD			6.52		1	20	50	S3.5
33	2750	230	100%	FAF 1	11.96				1	30	50	S3.5
34		230		SPARE	0.00				1	20	50	-
35		230		SPARE		0.00			1	20	50	-
36		230		SPARE		0.00			1	20	50	-
	75247			TOTAL	61.52	71.82	60.35	44.31	40			

PANELBOARD DESCRIPTION					
				FEEDER WIRE SIZE:	Y50 (SEE WIRING AND CONDUIT CODE)
LOCATION:	ELECTRICAL ROOM @ GF	MAIN KAIC:	22 kAIC		
ENCLOSURE:	NEMA 1	BRANCH KAIC:	18 kAIC	NOTES:	1. USE INDUSTRIAL TYPE CIRCUIT BREAKERS.
MOUNTING:	SURFACE MOUNTED	BUS BRACING:	22 kA		2. PROVIDE GROUND TERMINAL BUS W/ CRIMP LUGS.
VOLTAGE:	400 V	DEM. FACTOR:	79%		3. BUS BARS SHALL BE SILVER PLATED.
AMPERES:	92.24	FED FROM:	EMDP		4. ALL EQUIPMENT SHALL BE RATED 60Hz.

I
E–1001

SCHEDULE OF LOADS

SCALE NTS

a.c.ong CONSULTING INC.
Engineering + Management
ISO 9001:2015 Certified
2F LTA Building 118 Perea Street, Legaspi Village, 1229 Makati City, Philippines
Tel. Nos.: +63 2 8935827 Fax No.: +63 2 8935829
Email: acoconsulting@aco.com.ph Website: www.aco.com.ph

CERTIFIED BY
RODEL JOSELITO B. MANABAT
PROFESSIONAL ELECTRICAL ENGINEER
REG. NO.: 3402
TIN NO. : 158–336–047
PTR NO. : 2733331
DATE : JANUARY 23, 2018
PLACE : MANDALUYONG CITY

OWNER: METROPOLITAN WATERWORKS AND SEWERAGE SYSTEM REGULATORY OFFICE
MWSS COMPOUND, KATIPUNAN AVENUE, MATANDANG BALARA, QUEZON CITY

PROJECT TITLE/LOCATION: 3-STOREY OFFICE BUILDING WITH ROOF DECK
MWSS COMPOUND, KATIPUNAN AVENUE, MATANDANG BALARA, QUEZON CITY

CLIENT
PROJECT PROPONENT: MELCHOR S. CORDOVA, ALTERNATE END–USER FOR RO BUILDING
APPROVED BY: PATRICK LESTER N. TY, CHIEF REGULATOR, MWSS RO

SHEET CONTENTS: SCHEDULE OF LOADS

R.A. 9266 SEC. 33
DRAWINGS AND SPECIFICATIONS AND CONTRACT DOCUMENTS DULY SIGNED, STAMPED OR SEALED AS INSTRUMENTS FOR SERVICE ARE THE INTELLECTUAL PROPERTY AND DOCUMENTS OF ARCHITECT, WHETHER THE OBJECT FOR WHICH THEY ARE MADE IS EXECUTED OR NOT. IT SHALL BE UNLAWFUL FOR ANY PERSON TO DUPLICATE OR TO MAKE COPIES OF SAID DOCUMENTS FOR USE IN THE REPETITION OF AND FOR OTHER PROJECTS OR BUILDINGS, WHETHER EXECUTED PARTLY OR IN WHOLE, WITHOUT THE WRITTEN CONSENT OF THE ARCHITECT OR AUTHOR OF SAID DOCUMENTS.

CADD	DATE	NO.	REVISIONS	CHK	DATE	PAPER SIZE	SHEET NO.
AVL	JUL 2018					20X30	E-1001
DESIGNED	DATE					SCALE	PROJECT NO.
RRVP	JUL 2018					AS SHOWN	SO-G-17-036
APPROVED	DATE						
RJBM	JUL 2018						

PANELBOARD NAME:	ELP1	MAIN BREAKER:	AT	AF	POLE	VOLTAGE	TYPE:	CENTER MAIN
			30	50	1	230		

CIRCUIT NO.	VA	VOLTAGE	DEMAND FACTOR	DESCRIPTION	AMPERE Ø AN	AMPERE Ø BN	AMPERE Ø CN	AMPERE 1Ø	POLE	AMPERE TRIP (AT)	AMPERE FRAME (AF)	WIRE CODE
1	207	230	100%	LIGHTS @ CANOPY				0.90	1	**20**	50	**S3.5**
2	940	230	100%	LIGHTS @ GF				4.09	1	**20**	50	**S3.5**
3	1209	230	100%	LIGHTS @ GF				5.26	1	**20**	50	**S3.5**
4	714	230	100%	LIGHTS @ GF				3.10	1	**20**	50	**S3.5**
5	480	230	100%	PARKING LIGHTS				2.09	1	**20**	50	**S3.5**
6	300	230	100%	PARKING LIGHTS				1.30	1	**20**	50	**S3.5**
7	360	230	80%	2 CONVENIENCE OUTLETS				1.57	1	**20**	50	**S3.5**
8	180	230	100%	BATTERY CHARGER				0.78	1	**20**	50	**S3.5**
9	237	230	100%	LIGHTS @ AUXILIARY BUILDING				1.03	1	**20**	50	**S3.5**
10	324	230	100%	PARKING LIGHTS				1.41	1	**20**	50	**S3.5**
11	54	230	100%	STEP LIGHTS				0.23	1	**20**	50	**S3.5**
12	108	230	100%	STEP LIGHTS				0.47	1	**20**	50	**S3.5**
13	81	230	100%	LANDSCAPE LIGHTS				0.35	1	**20**	50	**S3.5**
14	85	230	100%	LIGHTS @ FLAGPOLE AND RAMP				0.37	1	**20**	50	**S3.5**
15	192	230	100%	FENCE LIGHTS				0.83	1	**20**	50	**S3.5**
16		230		SPARE				0.00	1	**20**	50	-
17		230		SPARE				0.00	1	**20**	50	-
18		230		SPARE				0.00	1	**20**	50	-
	5471			**TOTAL**	**0.00**	**0.00**	**0.00**	**23.79**	18			

PANELBOARD DESCRIPTION				FEEDER WIRE SIZE:	S5.5	(SEE WIRING AND CONDUIT CODE)
LOCATION:	ELECTRICAL ROOM @ GF	MAIN KAIC:	10 kAIC			
ENCLOSURE:	NEMA 1	BRANCH KAIC:	10 kAIC	NOTES:	1. USE INDUSTRIAL TYPE CIRCUIT BREAKERS.	
MOUNTING:	SURFACE MOUNTED	BUS BRACING:	10 kA		2. PROVIDE GROUND TERMINAL BUS W/ CRIMP LUGS.	
VOLTAGE:	230 V	DEM. FACTOR:	99%		3. BUS BARS SHALL BE SILVER PLATED.	
AMPERES:	23.47	FED FROM:	EPP1		4. ALL EQUIPMENT SHALL BE RATED 60Hz.	

PANELBOARD NAME:	EPP2	MAIN BREAKER:	AT	AF	POLE	VOLTAGE	TYPE:	CENTER MAIN
			100	**100**	3	400		

CIRCUIT NO.	VA	VOLTAGE	DEMAND FACTOR	DESCRIPTION	AMPERE Ø AN	AMPERE Ø BN	AMPERE Ø CN	AMPERE 3Ø	POLE	AMPERE TRIP (AT)	AMPERE FRAME (AF)	WIRE CODE
1	3500	230	80%	WATER HEATER @ FEMALE EMPLOYEE'S TOILET	15.22				1	**20**	50	**S3.5**
2		230		SPARE	0.00				1	**20**	50	-
3	3500	230	80%	WATER HEATER @ MALE EMPLOYEE'S TOILET		15.22			1	**20**	50	**S3.5**
4	1620	230	80%	9 CONVENIENCE OUTLETS @ WATER QUALITY MONITORING DEPT		7.04			1	**20**	50	**S3.5**
5	3500	230	80%	WATER HEATER @ DEPUTY ADMIN OFFICE			15.22		1	**20**	50	**S3.5**
6	3500	230	80%	WATER HEATER @ DEPUTY ADMIN OFFICE			15.22		1	**20**	50	**S3.5**
7	1500	230	80%	HAND DRYER @ FEMALE EMPLOYEE'S TOILET	6.52				1	**20**	50	**S3.5**
8	1500	230	80%	HAND DRYER @ MALE EMPLOYEE'S TOILET	6.52				1	**20**	50	**S3.5**
9	1500	230	80%	HAND DRYER @ PWD		6.52			1	**20**	50	**S3.5**
10	500	230	80%	WATER DISPENSER @ PANTRY - 4		2.17			1	**20**	50	**S3.5**
11	500	230	80%	WATER DISPENSER @ MESS HALL			2.17		1	**20**	50	**S3.5**
12	500	230	80%	WATER DISPENSER @ PANTRY - 3			2.17		1	**20**	50	**S3.5**
13	500	230	80%	WATER DISPENSER @ PANTRY - 2	2.17				1	**20**	50	**S3.5**
14	1440	230	80%	8 CONVENIENCE OUTLETS @ BAC RM, CONSULTANT'S RM, UTILITY RM	6.26				1	**20**	50	**S3.5**
15	720	230	80%	4 CONVENIENCE OUTLETS @ FITNESS GYM		3.13			1	**20**	50	**S3.5**
16	1260	230	80%	7 CONVENIENCE OUTLETS @ MESS HALL, DEPT MANAGER		5.48			1	**20**	50	**S3.5**
17	1620	230	80%	9 CONVENIENCE OUTLETS @ CONSULTANT'S RM			7.04		1	**20**	50	**S3.5**
18	1800	230	80%	10 CONVENIENCE OUTLETS @ CONSULTANT'S RM			7.83		1	**20**	50	**S3.5**
19	720	230	80%	4 CONVENIENCE OUTLETS @ STORAGE, LOBBY	3.13				1	**20**	50	**S3.5**
20	1440	230	80%	8 CONVENIENCE OUTLETS @ TARIFF CONTROL AND MONITORING DEPT, STORAGE	6.26				1	**20**	50	**S3.5**
21	1620	230	80%	9 CONVENIENCE OUTLETS @ FINANCIAL AUDIT AND ASSET MONITORING DEPT		7.04			1	**20**	50	**S3.5**
22	1620	230	80%	9 CONVENIENCE OUTLETS @ OPERATIONS MONITORING DEPT		7.04			1	**20**	50	**S3.5**
23	1800	230	80%	10 CONVENIENCE OUTLETS @ DEPUTY ADMINISTRATOR OFFICE			7.83		1	**20**	50	**S3.5**
24	1260	230	80%	7 CONVENIENCE OUTLETS @ DEPUTY ADMIN OFFICE, OPERATIONS MONITORING DEPT			5.48		1	**20**	50	**S3.5**
25	1800	230	80%	10 CONVENIENCE OUTLETS @ MEETING ROOM	7.83				1	**20**	50	**S3.5**
26	1170	230	100%	LIGHTS @ 2F	5.09				1	**20**	50	**S3.5**
27	2750	230	80%	FAF 2		11.96			1	**20**	50	**S3.5**
28	1031	230	100%	LIGHTS @ 2F		4.48			1	**20**	50	**S3.5**
29	500	230	80%	PROJECTOR			2.17		1	**20**	50	**S3.5**
30	500	230	80%	PROJECTOR			2.17		1	**20**	50	**S3.5**
31	1095	230	100%	LIGHTS @ 2F	4.76				1	**20**	50	**S3.5**
32	584	230	100%	LIGHTS @ 2F	2.54				1	**20**	50	**S3.5**
33	1170	230	100%	LIGHTS @ 2F		5.09			1	**20**	50	**S3.5**
34		230	100%	SPARE		0.00			1	**20**	50	-
35		230		SPARE			0.00		1	**20**	50	-
36		230		SPARE			0.00		1	**20**	50	-
37		230		SPACE	0.00				1		50	-
38		230		SPACE	0.00				1		50	-
39		230		SPACE			0.00		1		50	-
40		230		SPACE			0.00		1		50	-
41		230		SPACE		0.00			1		50	-
42		230		SPACE		0.00			1		50	-
	48020			**TOTAL**	**66.30**	**75.18**	**67.30**	**0.00**	42			

PANELBOARD DESCRIPTION				FEEDER WIRE SIZE:	Y30	(SEE WIRING AND CONDUIT CODE)
LOCATION:	ELECTRICAL ROOM @ 2F	MAIN KAIC:	18 kAIC			
ENCLOSURE:	NEMA 1	BRANCH KAIC:	10 kAIC	NOTES:	1. USE INDUSTRIAL TYPE CIRCUIT BREAKERS.	
MOUNTING:	SURFACE MOUNTED	BUS BRACING:	18 kA		2. PROVIDE GROUND TERMINAL BUS W/ CRIMP LUGS.	
VOLTAGE:	400 V	DEM. FACTOR:	82%		3. BUS BARS SHALL BE SILVER PLATED.	
AMPERES:	61.72	FED FROM:	EMDP		4. ALL EQUIPMENT SHALL BE RATED 60Hz.	

I
E-1002

SCHEDULE OF LOADS

SCALE NTS

a.c.ong CONSULTING INC.
Engineering + Management
ISO 9001:2015 Certified
2F LTA Building 118 Perea Street, Legaspi Village, 1229 Makati City, Philippines
Tel. Nos.: +63 2 8935827 Fax No.: +63 2 8935829
Email: acoconsulting@aco.com.ph Website: www.aco.com.ph

CERTIFIED BY
RODEL JOSELITO B. MANABAT
PROFESSIONAL ELECTRICAL ENGINEER
REG. NO.: 3402
TIN NO. : 158-336-047
PTR NO. : 2733331
DATE : JANUARY 23, 2018
PLACE : MANDALUYONG CITY

OWNER
METROPOLITAN WATERWORKS AND SEWERAGE SYSTEM REGULATORY OFFICE
MWSS COMPOUND, KATIPUNAN AVENUE, MATANDANG BALARA, QUEZON CITY

PROJECT TITLE/LOCATION
3-STOREY OFFICE BUILDING WITH ROOF DECK
MWSS COMPOUND, KATIPUNAN AVENUE, MATANDANG BALARA, QUEZON CITY

CLIENT
PROJECT PROPONENT: MELCHOR S. CORDOVA, ALTERNATE END-USER FOR RO BUILDING
APPROVED BY: PATRICK LESTER N. TY, CHIEF REGULATOR, MWSS RO

SHEET CONTENTS
SCHEDULE OF LOADS

R.A. 9266 SEC. 33
DRAWINGS AND SPECIFICATIONS AND CONTRACT DOCUMENTS DULY SIGNED, STAMPED OR SEALED AS INSTRUMENTS FOR SERVICE ARE THE INTELLECTUAL PROPERTY AND DOCUMENTS OF ARCHITECT, WHETHER THE OBJECT FOR WHICH THEY ARE MADE IS EXECUTED OR NOT. IT SHALL BE UNLAWFUL FOR ANY PERSON TO DUPLICATE OR TO MAKE COPIES OF SAID DOCUMENTS FOR USE IN THE REPETITION OF AND FOR OTHER PROJECTS OR BUILDINGS, WHETHER EXECUTED PARTLY OR IN WHOLE, WITHOUT THE WRITTEN CONSENT OF THE ARCHITECT OR AUTHOR OF SAID DOCUMENTS.

CADD	DATE	NO.	REVISIONS	CHK	DATE	PAPER SIZE	SHEET NO.
AVL	JUL 2018					20X30	E-1002
DESIGNED	DATE					SCALE	PROJECT NO.
RRVP	JUL 2018					AS SHOWN	SO-G-17-036
APPROVED	DATE						
RJBM	JUL 2018						

PANELBOARD NAME:				EPP3	MAIN BREAKER:		AT	AF	POLE	VOLTAGE	TYPE:	CENTER MAIN
							100	100	3	400		
CIRCUIT NO.	VA	VOLTAGE	DEMAND FACTOR	DESCRIPTION	AMPERE				POLE	AMPERE TRIP (AT)	AMPERE FRAME (AF)	WIRE CODE
					Ø AN	Ø BN	Ø CN	3Ø				
1	1500	230	80%	HAND DRYER @ FEMALE EMPLOYEE'S TOILET	6.52				1	20	50	S3.5
2	1500	230	80%	HAND DRYER @ MALE EMPLOYEE'S TOILET	6.52				1	20	50	S3.5
3	1500	230	80%	HAND DRYER @ PWD		6.52			1	20	50	S3.5
4	3500	230	80%	WATER HEATER @ DEPUTY ADMIN		15.22			1	20	50	S3.5
5	3500	230	80%	WATER HEATER @ DEPUTY ADMIN			15.22		1	20	50	S3.5
6	3000	230	80%	UPS			13.04		1	20	50	S3.5
7	1440	230	80%	8 CONVENIENCE OUTLETS @ HALLWAY, ELECTRICAL RM, STOCK RM, DATA CENTER	6.26				1	20	50	S3.5
8	1800	230	80%	10 CONVENIENCE OUTLETS @ ADMIN DEPT	7.83				1	20	50	S3.5
9	1500	230	80%	CONVENIENCE OUTLET @ PANTRY		6.52			1	20	50	S3.5
10	1000	230	80%	2 CONVENIENCE OUTLETS @ AV CONTROL RM		4.35			1	20	50	S3.5
11	500	230	80%	WATER DISPENSER @ PANTRY - 6			2.17		1	20	50	S3.5
12	500	230	80%	WATER DISPENSER @ PANTRY - 5			2.17		1	20	50	S3.5
13	1620	230	80%	9 CONVENIENCE OUTLETS @ RECORDS ROOM, CASHIER, LIBRARY	7.04				1	20	50	S3.5
14	1620	230	80%	9 CONVENIENCE OUTLETS @ ADMIN DEPT	7.04				1	20	50	S3.5
15	900	230	80%	5 CONVENIENCE OUTLETS @ CONF ROOM		3.91			1	20	50	S3.5
16	1800	230	80%	10 CONVENIENCE OUTLETS @ ADMIN DEPT		7.83			1	20	50	S3.5
17	1440	230	80%	8 CONVENIENCE OUTLETS @ LOBBY, STORAGE RM, WAITING AREA			6.26		1	20	50	S3.5
18	900	230	80%	5 CONVENIENCE OUTLETS @ DEPT MANAGER RM			3.91		1	20	50	S3.5
19	720	230	80%	4 CONVENIENCE OUTLETS @ DEPUTY ADMIN RM	3.13				1	20	50	S3.5
20	1800	230	80%	10 CONVENIENCE OUTLETS @ MEETING RM	7.83				1	20	50	S3.5
21	1980	230	80%	11 CONVENIENCE OUTLETS @ OFFICE OF THE CHIEF REGULATOR		8.61			1	20	50	S3.5
22		230		SPARE		0.00			1	20	50	-
23	1980	230	80%	11 CONVENIENCE OUTLETS @ MANAGEMENT INFO. SYSTEM, PUBLIC INFORMATION DEPT.			8.61		1	20	50	S3.5
24	500	230	80%	PROJECTOR			2.17		1	20	50	S3.5
25	500	230	80%	PROJECTOR	2.17				1	20	50	S3.5
26	540	230	80%	3 CONVENIENCE OUTLETS	2.35				1	20	50	S3.5
27	2750	230	80%	FAF 3		11.96			1	20	50	S3.5
28		230		SPARE		0.00			1	30	50	-
29	540	230	80%	3 CONVENIENCE OUTLETS @ ROOF DECK			2.35		1	20	50	S3.5
30		230		SPARE			0.00		1	30	50	-
31	200	230	100%	SIGNAGE LIGHTING	0.87				1	20	50	S3.5
32	720	230	80%	4 CONVENIENCE OUTLETS @ ROOF DECK	3.13				1	20	50	S3.5
33	162	230	100%	LIGHTS @ 3F		0.70			1	20	50	S3.5
34	782	230	100%	LIGHTS @ 3F		3.40			1	20	50	S3.5
35	1269	230	100%	LIGHTS @ 3F			5.52		1	20	50	S3.5
36	1109	230	100%	LIGHTS @ 3F			4.82		1	20	50	S3.5
37	1000	230	100%	PROV FOR LIGHTS @ RD	4.35				1	20	50	S3.5
38	800	230	100%	LIGHTS @ RD	3.48				1	20	50	S3.5
39		230		SPACE		0.00			1	20	50	S3.5
40		230		SPACE		0.00			1	20	50	S3.5
41		230		SPACE			0.00		1	20	50	S3.5
42		230		SPACE			0.00		1	20	50	S3.5
	46872		68%	TOTAL	68.52	69.02	66.25	0.00	42			

PANELBOARD DESCRIPTION					
LOCATION:	ELECTRICAL ROOM @ 3F	MAIN KAIC:	18 kAIC	FEEDER WIRE SIZE:	Y30 (SEE WIRING AND CONDUIT CODE)
ENCLOSURE:	NEMA 1	BRANCH KAIC:	10 kAIC	NOTES:	1. USE INDUSTRIAL TYPE CIRCUIT BREAKERS.
MOUNTING:	SURFACE MOUNTED	BUS BRACING:	18 kA		2. PROVIDE GROUND TERMINAL BUS W/ CRIMP LUGS.
VOLTAGE:	400 V	DEM. FACTOR:	82%		3. BUS BARS SHALL BE SILVER PLATED.
AMPERES:	56.78	FED FROM:	EMDP		4. ALL EQUIPMENT SHALL BE RATED 60Hz.

WIRE CODE

SINGLE PHASE SYSTEM (230 VOLTS)

WIRE CODE	CONDUCTOR CROSS-SECTIONAL AREA (mm^2)			CONDUIT DIAMETER (mm)	
	LINE WIRE	NEUTRAL WIRE	GROUND WIRE	IMC	PVC
S3.5	1 - 3.5	1 - 3.5	1 - 3.5	15	20
S5.5	1 - 5.5	1 - 5.5	1 - 3.5	20	25
S8.0	1 - 8.0	1 - 8.0	1 - 5.5	25	32
S14	1 - 14	1 - 14	1 - 8.0	25	32
S22	1 - 22	1 - 22	1 - 8.0	32	50
S30	1 - 30	1 - 30	1 - 8.0	32	50
S38	1 - 38	1 - 38	1 - 8.0	32	50
S50	1 - 50	1 - 50	1 - 14	50	63
S60	1 - 60	1 - 60	1 - 22	50	63
S80	1 - 80	1 - 80	1 - 22	50	63
S100	1 - 100	1 - 100	1 - 30	65	75
S125	1 - 125	1 - 125	1 - 30	65	75
S150	1 - 150	1 - 150	1 - 30	80	90
S175	1 - 175	1 - 175	1 - 30	80	90
S200	1 - 200	1 - 200	1 - 30	80	90
S250	1 - 250	1 - 250	1 - 50	90	100

NOTE: ALL WIRES TO BE USED SHALL BE OF TYPE LETTER THHN.

THREE PHASE SYSTEM (400 VOLTS)

WIRE CODE	CONDUCTOR CROSS-SECTIONAL AREA (mm^2)			CONDUIT DIAMETER (mm)	
	LINE WIRE	NEUTRAL WIRE	GROUND WIRE	IMC	PVC
Y3.5	3 - 3.5	1 - 3.5	1 - 3.5	15	20
Y5.5	3 - 5.5	1 - 5.5	1 - 3.5	20	25
Y8.0	3 - 8.0	1 - 8.0	1 - 5.5	25	32
Y14	3 - 14	1 - 14	1 - 8.0	25	32
Y22	3 - 22	1 - 22	1 - 8.0	32	50
Y30	3 - 30	1 - 30	1 - 8.0	32	50
Y38	3 - 38	1 - 38	1 - 8.0	32	50
Y50	3 - 50	1 - 50	1 - 14	50	63
Y60	3 - 60	1 - 60	1 - 22	50	63
Y80	3 - 80	1 - 80	1 - 22	50	63
Y100	3 - 100	1 - 100	1 - 30	65	75
Y125	3 - 125	1 - 125	1 - 30	65	75
Y150	3 - 150	1 - 150	1 - 30	80	90
Y175	3 - 175	1 - 175	1 - 30	80	90
Y200	3 - 200	1 - 200	1 - 30	80	90
Y250	3 - 250	1 - 250	1 - 30	90	100

NOTE: ALL WIRES TO BE USED SHALL BE OF TYPE LETTER THHN.

THREE PHASE SYSTEM (230 VOLTS)

WIRE CODE	CONDUCTOR CROSS-SECTIONAL AREA (mm^2)		CONDUIT DIAMETER (mm)	
	LINE WIRE	GROUND WIRE	IMC	PVC
T3.5	3 - 3.5	1 - 3.5	15	20
T5.5	3 - 5.5	1 - 3.5	20	25
T8.0	3 - 8.0	1 - 5.5	25	32
T14	3 - 14	1 - 8.0	25	32
T22	3 - 22	1 - 8.0	32	50
T30	3 - 30	1 - 8.0	32	50
T38	3 - 38	1 - 8.0	32	50
T50	3 - 50	1 - 14	50	63
T60	3 - 60	1 - 22	50	63
T80	3 - 80	1 - 22	50	63
T100	3 - 100	1 - 30	65	75
T125	3 - 125	1 - 30	65	75
T150	3 - 150	1 - 30	80	90
T200	3 - 200	1 - 30	80	90
T250	3 - 250	1 - 50	80	90

NOTE: ALL WIRES TO BE USED SHALL BE OF TYPE LETTER THHN.

I / E-1003 SCHEDULE OF LOADS

SCALE NTS

a.c.ong CONSULTING INC.
Engineering + Management
ISO 9001:2015 Certified
2F LTA Building 118 Perea Street, Legaspi Village, 1229 Makati City, Philippines
Tel. Nos.: +63 2 8935827 Fax No.: +63 2 8935829
Email: acoconsulting@aco.com.ph Website: www.aco.com.ph

CERTIFIED BY: RODEL JOSELITO B. MANABAT, PROFESSIONAL ELECTRICAL ENGINEER
REG. NO.: 3402
TIN NO. : 158-336-047
PTR NO. : 2733331
DATE : JANUARY 23, 2018
PLACE : MANDALUYONG CITY

OWNER: METROPOLITAN WATERWORKS AND SEWERAGE SYSTEM REGULATORY OFFICE
MWSS COMPOUND, KATIPUNAN AVENUE, MATANDANG BALARA, QUEZON CITY

PROJECT TITLE/LOCATION: 3-STOREY OFFICE BUILDING WITH ROOF DECK
MWSS COMPOUND, KATIPUNAN AVENUE, MATANDANG BALARA, QUEZON CITY

CLIENT
PROJECT PROPONENT: MELCHOR S. CORDOVA, ALTERNATE END-USER FOR RO BUILDING
APPROVED BY: PATRICK LESTER N. TY, CHIEF REGULATOR, MWSS RO

SHEET CONTENTS: SCHEDULE OF LOADS

R.A. 9266 SEC. 33
DRAWINGS AND SPECIFICATIONS AND CONTRACT DOCUMENTS DULY SIGNED, STAMPED OR SEALED AS INSTRUMENTS FOR SERVICE ARE THE INTELLECTUAL PROPERTY AND DOCUMENTS OF ARCHITECT, WHETHER THE OBJECT FOR WHICH THEY ARE MADE IS EXECUTED OR NOT. IT SHALL BE UNLAWFUL FOR ANY PERSON TO DUPLICATE OR TO MAKE COPIES OF SAID DOCUMENTS FOR USE IN THE REPETITION OF AND FOR OTHER PROJECTS OR BUILDINGS, WHETHER EXECUTED PARTLY OR IN WHOLE, WITHOUT THE WRITTEN CONSENT OF THE ARCHITECT OR AUTHOR OF SAID DOCUMENTS.

CADD	DATE	NO.	REVISIONS	CHK	DATE	PAPER SIZE	SHEET NO.
AVL	JUL 2018					20X30	E-1003
DESIGNED	DATE					SCALE	PROJECT NO.
RRVP	JUL 2018					AS SHOWN	SO-G-17-036
APPROVED	DATE						
RJBM	JUL 2018						

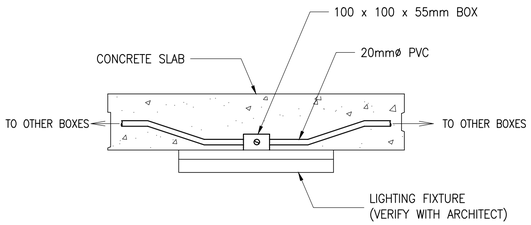

1 SURFACE MOUNTED LIGHTING FIXTURE

E-3001 SCALE NTS

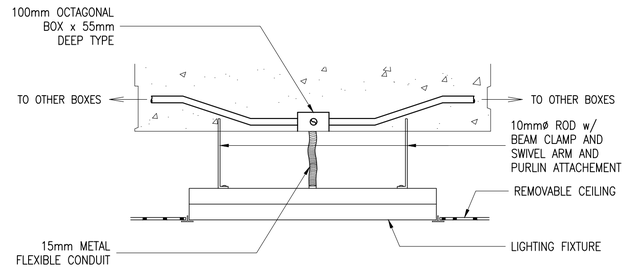

2 RECESSED FLUORESCENT FIXTURE

E-3001 SCALE NTS

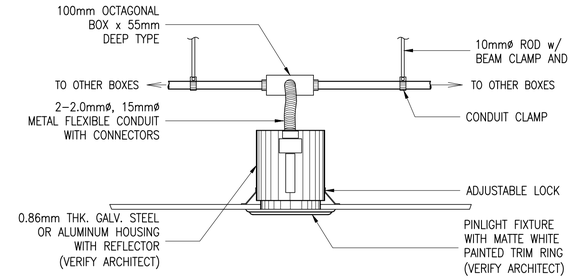

3 DOWNLIGHT MOUNTING DETAIL

E-3001 SCALE NTS

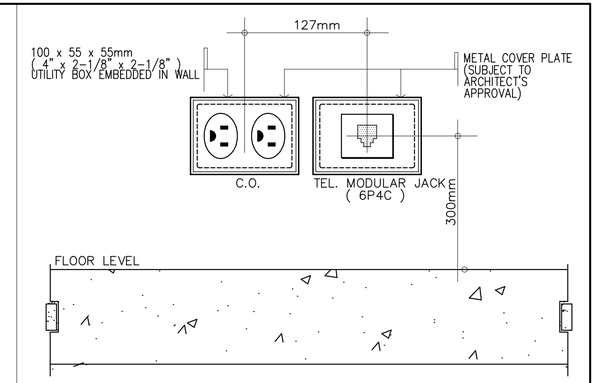

4 TYPICAL C.O. & TELEPHONE MODULAR JACK MOUNTING DETAIL

E-3001 SCALE NTS

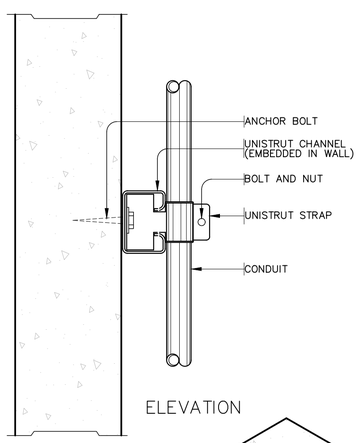

ELEVATION

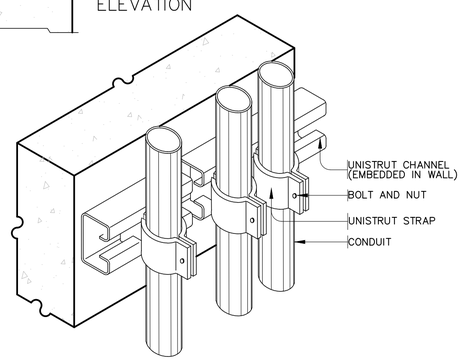

ISOMETRIC

5 TYPICAL CONDUIT SUPPORT DETAIL FOR VERTICAL RUNS

E-3001 SCALE NTS

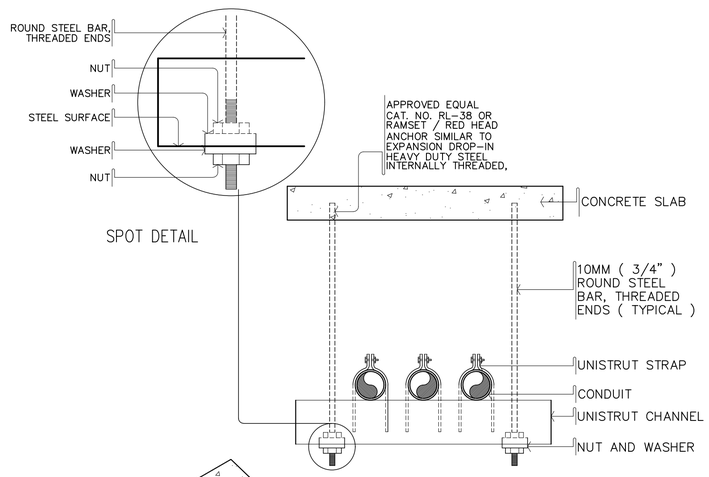

SPOT DETAIL

ELEVATION VIEW

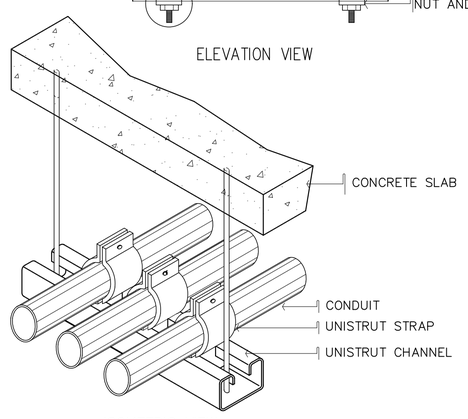

ISOMETRIC VIEW

6 FOR HORIZONTAL RUNS TYPICAL CONDUIT SUPPORT DETAIL

E-3001 SCALE NTS

NOTE :

CABLE-SUPPORT BUSHING SHALL BE SCREWED AT THE END OF CONDUIT IN A CABINET, PULLBOX, OR CABLE-SUPPORT BOX.

SPACING FOR CONDUCTOR SUPPORTS

WIRE SIZE	SUPPORT OF CONDUCTORS IN VERTICAL RACEWAY	
2.0mm² THROUGH 8.0mm²	NOT GREATER THAN	30.48M
14mm² THROUGH 50mm²	NOT GREATER THAN	30.48M
60mm² THROUGH 100mm²	NOT GREATER THAN	24.40M
OVER 100mm² THROUGH 200mm²	NOT GREATER THAN	18.29M
OVER 200mm² THROUGH 250mm²	NOT GREATER THAN	15.24M
OVER 250mm² THROUGH 400mm²	NOT GREATER THAN	12.19M
OVER 400mm²	NOT GREATER THAN	10.67M

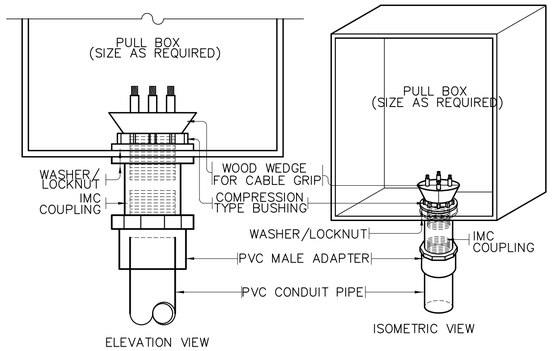

ELEVATION VIEW

ISOMETRIC VIEW

7 CABLE SUPPORT FOR VERTICAL RISERS DETAIL

E-3001 SCALE NTS

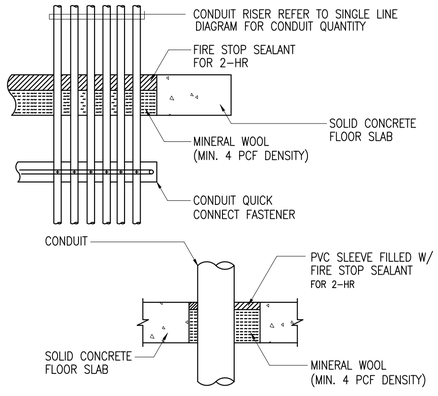

8 RACEWAY PENETRATION WITH FIRESTOP

E-3001 SCALE NTS

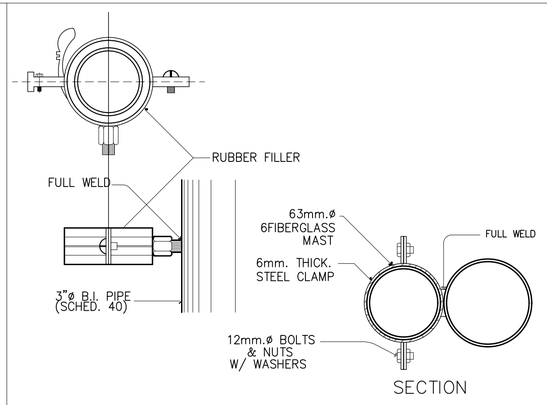

SECTION

9 CABLE CLAMP DETAIL

E-3001 SCALE NTS

a.c.ong CONSULTING INC.
Engineering + Management
ISO 9001:2015 Certified
2F LTA Building 118 Perea Street, Legaspi Village, 1229 Makati City, Philippines
Tel. Nos.: +63 2 8935827 Fax No.: +63 2 8935829
Email: acoconsulting@aco.com.ph Website: www.aco.com.ph

CERTIFIED BY: RODEL JOSELITO B. MANABAT, PROFESSIONAL ELECTRICAL ENGINEER
REG. NO.: 3402
TIN NO. : 158-336-047
PTR NO. : 2733331
DATE : JANUARY 23, 2018
PLACE : MANDALUYONG CITY

OWNER: METROPOLITAN WATERWORKS AND SEWERAGE SYSTEM REGULATORY OFFICE
MWSS COMPOUND, KATIPUNAN AVENUE, MATANDANG BALARA, QUEZON CITY

PROJECT TITLE/LOCATION: 3-STOREY OFFICE BUILDING WITH ROOF DECK
MWSS COMPOUND, KATIPUNAN AVENUE, MATANDANG BALARA, QUEZON CITY

CLIENT
PROJECT PROPONENT: MELCHOR S. CORDOVA, ALTERNATE END-USER FOR RO BUILDING
APPROVED BY: PATRICK LESTER N. TY, CHIEF REGULATOR, MWSS RO

SHEET CONTENTS: MISCELLANEOUS DETAILS

R.A. 9266 SEC. 33
DRAWINGS AND SPECIFICATIONS AND CONTRACT DOCUMENTS DULY SIGNED, STAMPED OR SEALED AS INSTRUMENTS FOR SERVICE ARE THE INTELLECTUAL PROPERTY AND DOCUMENTS OF ARCHITECT, WHETHER THE OBJECT FOR WHICH THEY ARE MADE IS EXECUTED OR NOT. IT SHALL BE UNLAWFUL FOR ANY PERSON TO DUPLICATE OR TO MAKE COPIES OF SAID DOCUMENTS FOR USE IN THE REPETITION OF AND FOR OTHER PROJECTS OR BUILDINGS, WHETHER EXECUTED PARTLY OR IN WHOLE, WITHOUT THE WRITTEN CONSENT OF THE ARCHITECT OR AUTHOR OF SAID DOCUMENTS.

CADD	DATE	NO.	REVISIONS	CHK	DATE	PAPER SIZE	SHEET NO.
AVL	JUL 2018					20X30	E-3001
DESIGNED	DATE					SCALE	PROJECT NO.
RRVP	JUL 2018					AS SHOWN	SO-G-17-036
APPROVED	DATE						
RJBM	JUL 2018						

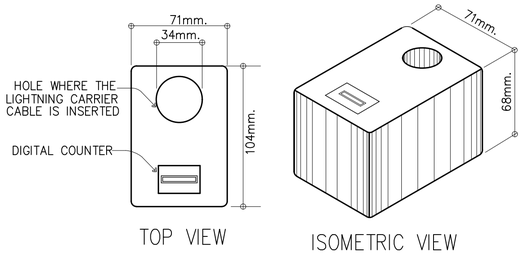

1 DETAIL OF LIGHTNING STROKE COUNTER DETAIL (OPTIONAL)

E-3002 SCALE NTS

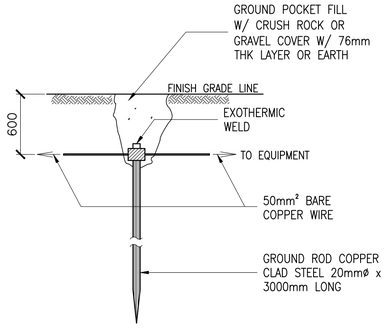

2 GROUND ROD DETAIL

E-3002 SCALE NTS

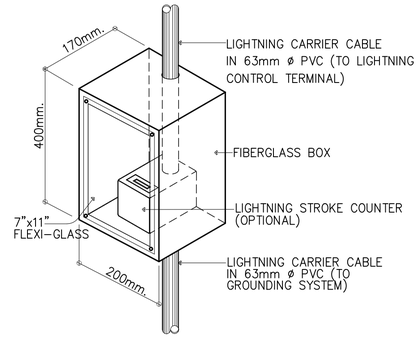

3 COUNTER BOX DETAIL

E-3002 SCALE NTS

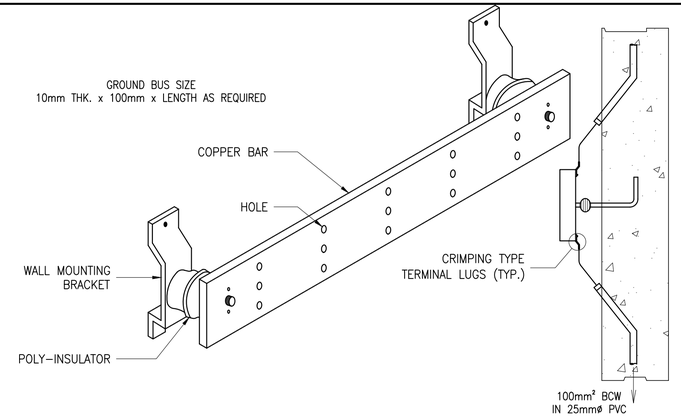

4 PRE-DRILLED GROUNDING BUSBAR DETAILS

E-3002 SCALE NTS

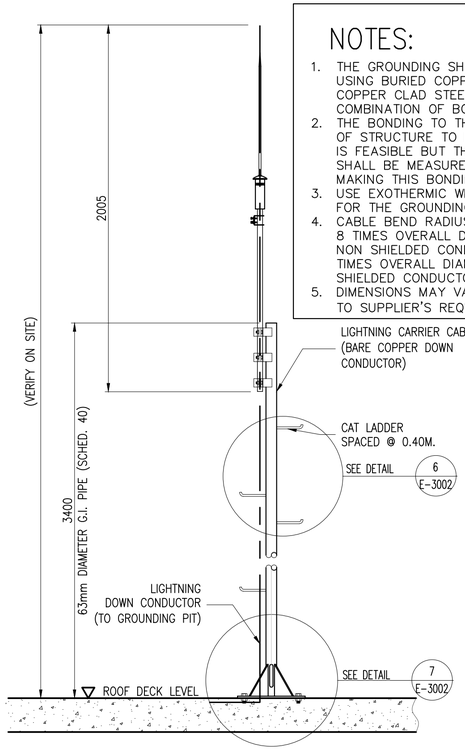

NOTES:

1. THE GROUNDING SHALL BE DONE USING BURIED COPPER STRIPS OR COPPER CLAD STEEL ROD OR COMBINATION OF BOTH.
2. THE BONDING TO THE GROUNDING OF STRUCTURE TO BE PROTECTED IS FEASIBLE BUT THE RESISTANCE SHALL BE MEASURED BEFORE MAKING THIS BONDING.
3. USE EXOTHERMIC WELD CONNECTION FOR THE GROUNDING SYSTEM.
4. CABLE BEND RADIUS SHALL BE: – 8 TIMES OVERALL DIAMETER FOR NON SHIELDED CONDUCTOR. – 12 TIMES OVERALL DIAMETER FOR SHIELDED CONDUCTOR.
5. DIMENSIONS MAY VARY ACCORDING TO SUPPLIER'S REQUIREMENTS.

5 LIGHTNING CONTROL TERMINAL MOUNTING DETAIL

E-3002 SCALE NTS

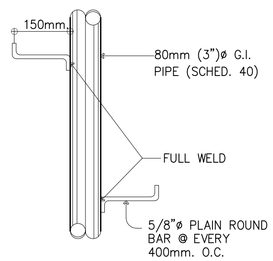

6 CAT LADDER DETAIL

E-3002 SCALE NTS

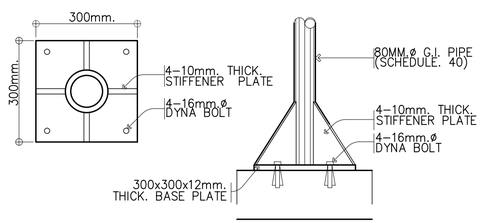

7 BASE PLATE DETAIL

E-3002 SCALE NTS

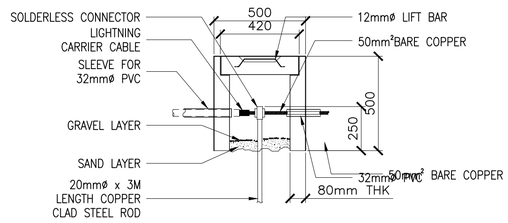

8 GROUND WELL DETAIL

E-3002 SCALE NTS

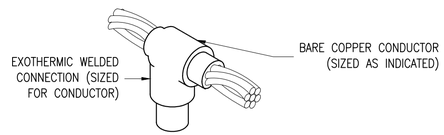

9 CONDUCTOR TO GROUNDING ROD CONNECTION DETAIL

E-3002 SCALE NTS

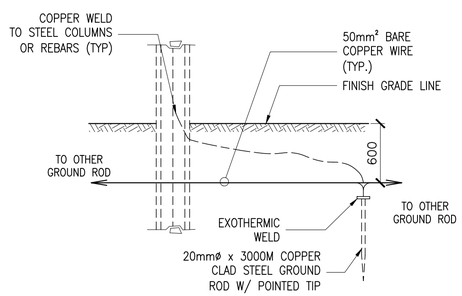

10 COLUMN GROUNDING

E-3002 SCALE NTS

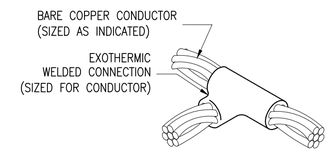

11 CONDUCTOR TO CONDUCTOR 3-WAY ROD CONNECTION DETAIL

E-3002 SCALE NTS

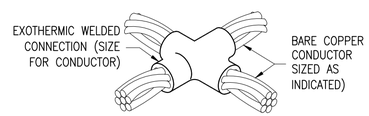

12 CONDUCTOR TO CONDUCTOR 4-WAY ROD CONNECTION DETAIL

E-3002 SCALE NTS

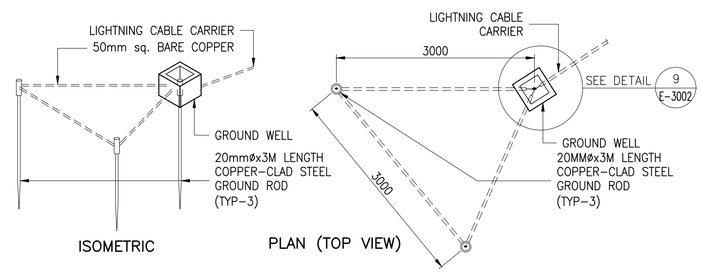

13 LIGHTNING CABLE CARRIER GROUNDING STATION

E-3002 SCALE NTS

a.C.ONG CONSULTING INC.
Engineering + Management
ISO 9001:2015 Certified
2F LTA Building 118 Perea Street, Legaspi Village, 1229 Makati City, Philippines
Tel. Nos.: +63 2 8935827 Fax No.: +63 2 8935829
Email: acoconsulting@aco.com.ph Website: www.aco.com.ph

CERTIFIED BY: RODEL JOSELITO B. MANABAT, PROFESSIONAL ELECTRICAL ENGINEER
REG. NO.: 3402
TIN NO. : 158-336-047
PTR NO. : 2733331
DATE : JANUARY 23, 2018
PLACE : MANDALUYONG CITY

OWNER: METROPOLITAN WATERWORKS AND SEWERAGE SYSTEM REGULATORY OFFICE
MWSS COMPOUND, KATIPUNAN AVENUE, MATANDANG BALARA, QUEZON CITY

PROJECT TITLE/LOCATION: 3-STOREY OFFICE BUILDING WITH ROOF DECK
MWSS COMPOUND, KATIPUNAN AVENUE, MATANDANG BALARA, QUEZON CITY

CLIENT
PROJECT PROPONENT: MELCHOR S. CORDOVA, ALTERNATE END-USER FOR RO BUILDING
APPROVED BY: PATRICK LESTER N. TY, CHIEF REGULATOR, MWSS RO

SHEET CONTENTS: MISCELLANEOUS DETAILS

R.A. 9266 SEC. 33
DRAWINGS AND SPECIFICATIONS AND CONTRACT DOCUMENTS DULY SIGNED, STAMPED OR SEALED AS INSTRUMENTS FOR SERVICE ARE THE INTELLECTUAL PROPERTY AND DOCUMENTS OF ARCHITECT, WHETHER THE OBJECT FOR WHICH THEY ARE MADE IS EXECUTED OR NOT. IT SHALL BE UNLAWFUL FOR ANY PERSON TO DUPLICATE OR TO MAKE COPIES OF SAID DOCUMENTS FOR USE IN THE REPETITION OF AND FOR OTHER PROJECTS OR BUILDINGS, WHETHER EXECUTED PARTLY OR IN WHOLE, WITHOUT THE WRITTEN CONSENT OF THE ARCHITECT OR AUTHOR OF SAID DOCUMENTS.

CADD	DATE	NO.	REVISIONS	CHK	DATE	PAPER SIZE	SHEET NO.
AVL	JUL 2018					20X30	E-3002
DESIGNED	DATE					SCALE	PROJECT NO.
RRVP	JUL 2018					AS SHOWN	SO-G-17-036
APPROVED	DATE						
RJBM	JUL 2018						

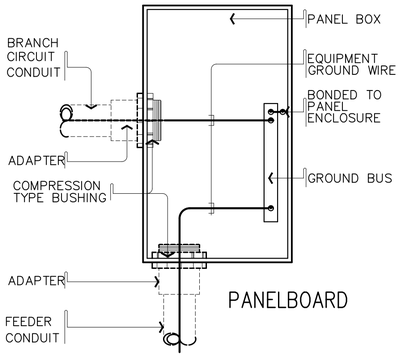

PANELBOARD

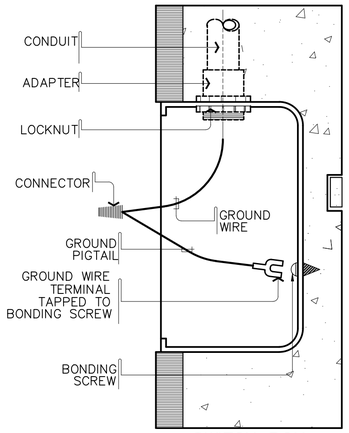

SWITCH BOX

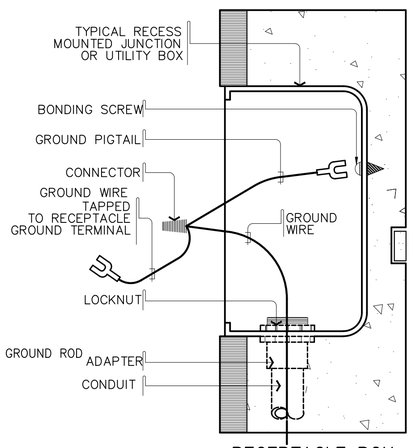

RECEPTACLE BOX

1 E-3003 TYPICAL GROUNDING CONNECTION DETAIL

SCALE NTS

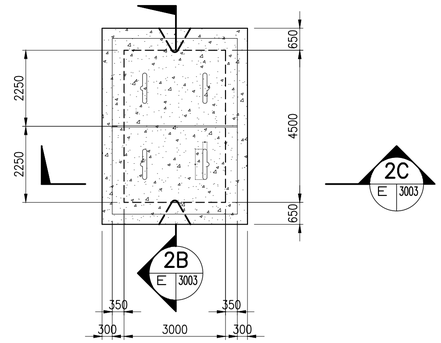

2A E-3003 PLAN

SCALE NTS

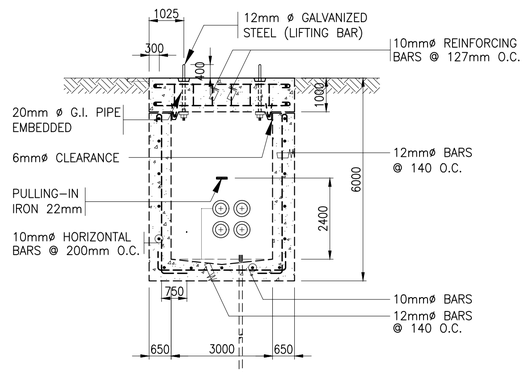

2B E-3003 SECTION

SCALE NTS

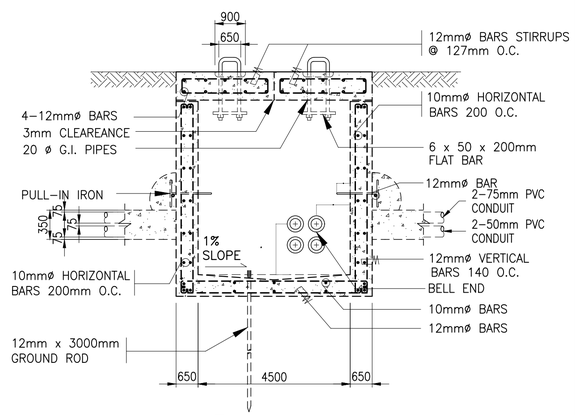

2C E-3003 SECTION

SCALE NTS

2 E-3003 HANDHOLE DETAIL FOR VEHICULAR LANE

SCALE NTS

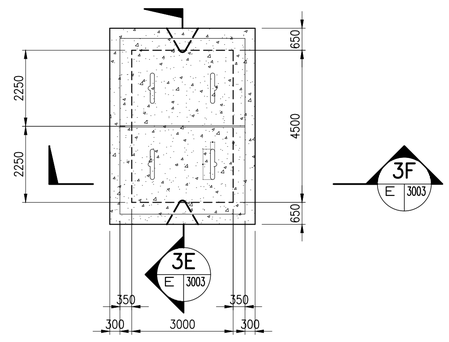

3D E-3003 PLAN

SCALE NTS

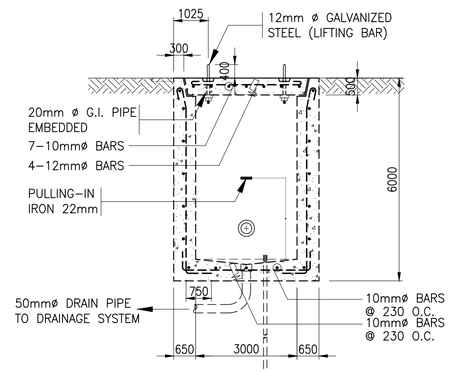

3E E-3003 SECTION

SCALE NTS

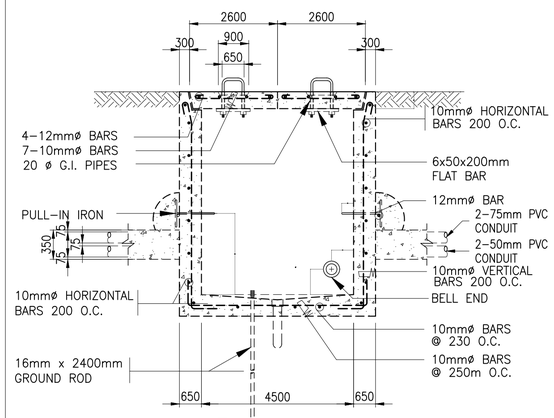

3F E-3003 SECTION

SCALE NTS

3 E-3003 HANDHOLE DETAIL FOR NON-VEHICULAR LANE

SCALE NTS

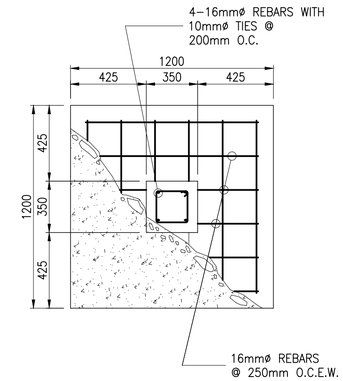

FOOTING PLAN

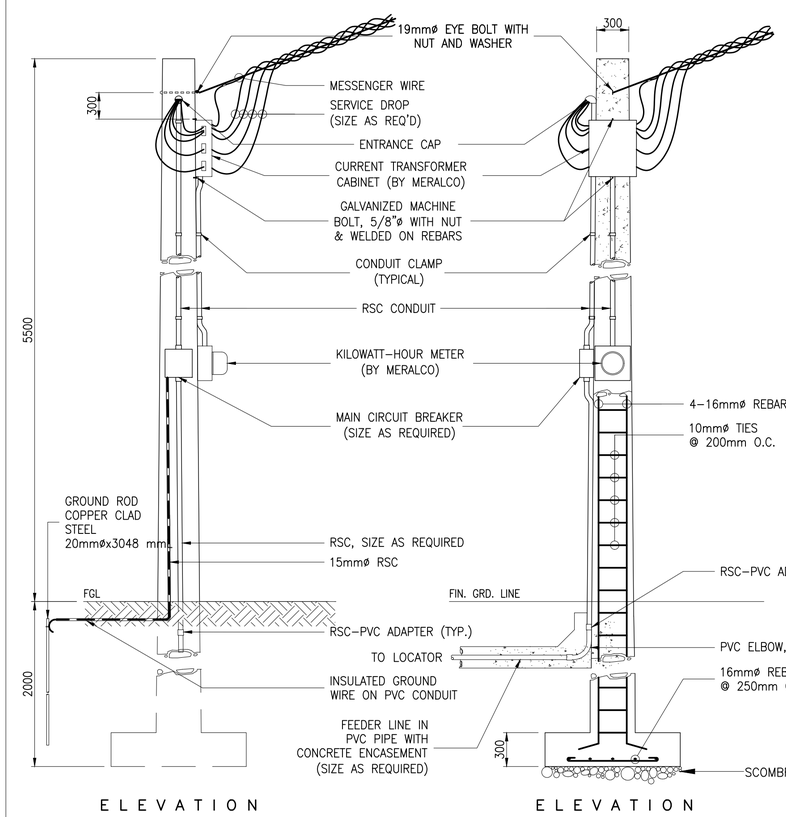

4 E-3003 TYPICAL 3Ø METERING/SERVICE ENTRANCE ON CONCRETE PRIVATE POLE

SCALE NTS

a.c.ong CONSULTING INC.
Engineering + Management
ISO 9001:2015 Certified
2F LTA Building 118 Perea Street, Legaspi Village, 1229 Makati City, Philippines
Tel. Nos.: +63 2 8935827 Fax No.: +63 2 8935829
Email: acoconsulting@aco.com.ph Website: www.aco.com.ph

CERTIFIED BY: RODEL JOSELITO B. MANABAT, PROFESSIONAL ELECTRICAL ENGINEER

REG. NO.: 3402
TIN NO. : 158-336-047
PTR NO. : 2733331
DATE : JANUARY 23, 2018
PLACE : MANDALUYONG CITY

OWNER: METROPOLITAN WATERWORKS AND SEWERAGE SYSTEM REGULATORY OFFICE
MWSS COMPOUND, KATIPUNAN AVENUE, MATANDANG BALARA, QUEZON CITY

PROJECT TITLE/LOCATION: 3-STOREY OFFICE BUILDING WITH ROOF DECK
MWSS COMPOUND, KATIPUNAN AVENUE, MATANDANG BALARA, QUEZON CITY

CLIENT
PROJECT PROPONENT: MELCHOR S. CORDOVA, ALTERNATE END-USER FOR RO BUILDING
APPROVED BY: PATRICK LESTER N. TY, CHIEF REGULATOR, MWSS RO

SHEET CONTENTS: MISCELLANEOUS DETAILS

R.A. 9266 SEC. 33
DRAWINGS AND SPECIFICATIONS AND CONTRACT DOCUMENTS DULY SIGNED, STAMPED OR SEALED AS INSTRUMENTS FOR SERVICE ARE THE INTELLECTUAL PROPERTY AND DOCUMENTS OF ARCHITECT, WHETHER THE OBJECT FOR WHICH THEY ARE MADE IS EXECUTED OR NOT. IT SHALL BE UNLAWFUL FOR ANY PERSON TO DUPLICATE OR TO MAKE COPIES OF SAID DOCUMENTS FOR USE IN THE REPETITION OF AND FOR OTHER PROJECTS OR BUILDINGS, WHETHER EXECUTED PARTLY OR IN WHOLE, WITHOUT THE WRITTEN CONSENT OF THE ARCHITECT OR AUTHOR OF SAID DOCUMENTS.

CADD	DATE	NO.	REVISIONS	CHK	DATE	PAPER SIZE	SHEET NO.
AVL	JUL 2018					20X30	E-3003
DESIGNED	DATE					SCALE	PROJECT NO.
RRVP	JUL 2018					AS SHOWN	SO-G-17-036
APPROVED	DATE						
RJBM	JUL 2018						