DRAWING INDEX

SHEET NO.	CONTENTS
F-0000	DRAWING INDEX, GENERAL NOTES, DESIGN CRITERIA, LEGENDS & SYMBOLS, EQUIPMENT SCHEDULE, ABBREVIATIONS
F-0001	SITE DEVELOPMENT FIRE PROTECTION LAYOUT
F-0101	GROUND FLOOR FIRE PROTECTION LAYOUT
F-0102	SECOND FLOOR FIRE PROTECTION LAYOUT
F-0103	THIRD FLOOR FIRE PROTECTION LAYOUT
F-0104	ROOF DECK FIRE PROTECTION LAYOUT
F-0201	PUMP ROOM LAYOUT
F-0202	MISCELLANEOUS DETAILS (1 OF 3)
F-0203	MISCELLANEOUS DETAILS (2 OF 3)
F-0204	MISCELLANEOUS DETAILS (3 OF 3) SCHEMATIC RISER DIAGRAM

GENERAL NOTES:

SPRINKLER SYSTEM

1. ALL WORKS HEREIN INCLUDED SHALL BE IN ACCORDANCE WITH THE FOLLOWING CODES & REGULATIONS:
   THE FIRE CODE OF THE PHILIPPINES & REGULATIONS
   NATIONAL BUILDING CODE OF THE PHILIPPINES
   PSME – PHILIPPINE SOCIETY OF MECHANICAL ENGINEERS
   NFPA 10 – STANDARD FOR PORTABLE FIRE EXTINGUISHER
   NFPA 13 – STANDARD FOR THE INSTALLATION OF SPRINKLER SYSTEM
   NFPA 14 – STANDARD FOR THE INSTALLATION OF STANDPIPE AND HOSE SYSTEM
   NFPA 20 – STANDARD FOR THE INSTALLATION OF STATIONARY FIRE PUMP
   NFPA 101 – LIFE SAFETY CODE
   NFPA 5000 – BUILDING CONSTRUCTION AND SAFETY CODE
   UNDERWRITERS LABORATORIES, INC. (UL)
   FACTORY MUTUAL (FM)
   ASTM – AMERICAN SOCIETY FOR TESTING AND MATERIALS
   NEMA – NATIONAL ELECTRICAL MANUFACTURERS ASSOCIATION

2. THE WORK SHALL BE EXECUTED IN CLOSE COORDINATION WITH ALL TRADES. CONTRACTOR MUST BE FULLY RESPONSIBLE FOR THE EXACT LOCATION & DIMENSION OF ALL REQUIRED WALL & DOOR OPENINGS.

3. EXACT LOCATION OF ALL SPRINKLER HEADS SHALL BE COORDINATED WITH ARCHITECTURAL CEILING LAYOUT & SHALL BE SUBJECTED TO BOTH ARCHITECTS AND FIRE PROTECTION ENGINEERS APPROVAL.

4. LOCATION OF THE DRAIN PIPES SHALL BE COORDINATED WITH PLUMBING CONTRACTOR.

5. LOCATION & MOUNTING OF FIRE HOSE CABINET SHALL BE COORDINATED WITH ARCHITECTURAL FINISHES &BE SUBJECTED BE SUBJECTED TO BOTH THE ARCHITECTS & FIRE PROTECTION ENGINEERS APPROVAL.

6. SIZE OF RISER NIPPLE SHALL CONFORM TO THE PIPE SCHEDULE DELINEATED IN NFPA 13.

7. WATER FLOW PROVING DEVICES SHALL BE OF THE APPROVED TYPE.

8. ALL FLOOR CONTROL VALVES FOR THE SYSTEM SHALL BE:
   a. INDIVIDUALLY SUPERVISED AND MONITORED SUCH THAT THE CLOSING OF ANY PARTICULAR VALVE WILL RAISE A VISUAL AND AUDIO ALARM IN THE MAIN FIRE ALARM PANEL LOCATED IN THE COMMAND AND CONTROL CENTER PINPOINTING THE VALVE.
   b. LOCATED IN AREAS SUCH THAT THEY ARE EASILY ACCESSIBLE TO AUTHORIZED PERSONNEL FOR MAINTENANCE AND EMERGENCY OPERATION.

9. PROVIDE PIPE FLEXIBLE/EXPANSION JOINTS FOR ALL SERVICES PASSING THRU TO ALL BUILDING EXPANSION JOINTS.

10. ALL PIPE PENETRATION THRU WALLS/FIRE RATED WALLS SHALL BE PROVIDED WITH STEEL PIPE SLEEVE WITH 1 INCH. CIRCUMFERENTIAL CLEARANCE AND TO BE PROVIDED WITH AN APPROVED FIRE STOPPING MATERIAL.

11. PROVIDE FLANGE CONNECTION JOINT EVERY 12M & ONE SIDE OF EVERY FITTING CONNECTION OR CHANGE OF DIRECTION.

12. PROVIDE PIPE HANGER AT EVERY 2 MTRS, SWAY BRACE AND CLEVIS SUPPORT AT EVERY 12 MTRS.

13. PIPING TO BE SCH.# 40 BLACK IRON PIPE, FITTINGS 50mm AND SMALLER SHALL BE SCREWED TYPE, 65mm AND LARGER SHALL BE WELDED AND FLANGED TYPE.

14. ALL FIRE PROTECTION WORKS AND INSTALLATION SHALL BE SUPERVISED BY A LICENSED MECHANICAL ENGINEER.

15. ALL PIPE PENETRATION THRU CONCRETE, BEAM SHALL BE PROVIDED WITH STEEL PIPE SLEEVE WITH 1 INCH CIRCUMFERENTIAL CLEARANCE AND TO BE PROVIDED WITH AN APPROVED FIRE STOPPING MATERIAL.

16. THE SPRINKLER SYSTEM SHALL BE COMPLETE WITH FOLLOWING ACCESSORIES:
   –WATER ALARM GONG
   –REMOTE INSPECTOR TEST VALVE (RITV)
   –LOW PRESSURE AUDIBLE ALARM
   –ZONE CONTROL VALVE ALONG WITH FLOW SWITCH AS PER NFPA 13, SHALL BE PROVIDED FOR EACH FLOOR FLOOR AS SHOWN IN DRAWINGS.
   –ALL THE WATER FLOW SWITCH SHALL BE INTERLOCKED TO FIRE ALARM PANEL.

17. THE LOWEST END OF THE SPRINKLER DRAIN PIPES SHALL HAVE VALVE WITH DRAIN PROVISIONS IN ALL THE FLOOR.

18. ALL THE TEST DESIGNS SHALL BE CONNECTED TO THE NEAREST FLOOR DRAINS. COORDINATE WITH PLUMBING CONTRACTOR.

19. INSPECTORS TEST POINTS TO BE PROVIDED AT THE REMOTE POINTS.

20. ALL THE FIRE PROTECTION INSTALLATION SHALL BE SUITABLE FOR SEISMIC CONDITION. THE SEISMIC TYPE INSTALLATION DETAILS FOR ALL SUPPORTS SHALL BE APPROVED BY CONTRACTOR EMPLOYED APPROVED SPECIALIST.

21. LATERAL BRACES SHOULD BE PROVIDED WITHIN 0.60M (2 FT.) FROM THE PIPE CHANGES IN DIRECTION FOR PIPE RUNS LONGER THAN 1–8M (6 FT.) IT SHOULD BE SPACED MAXIMUM 12.20M (40 FT.) CENTER OF THE PIPE. LATERAL BRACES SHOULD BE PROVIDED WITHIN 1.80M (6 FT.) OF THE PIPE END. (FEEDMAIN AND CROSSMAIN)

22. PROVIDE NOTIFICATION/ROAD MARKINGS OF FIRE LANE FOR FIRE TRUCKS ALONG FIRE DEPARTMENT CONNECTION.

23. AUTOMATIC AIR RELEASE VALVE SHALL BE PROVIDED @ HIGHEST POINT OF SYSTEM PIPING TO EVACUATE AIR FROM SYSTEM

DESIGN CRITERIA: AUTOMATIC FIRE SPRINKLER SYSTEM

1. FIRE SPRINKLER SYSTEM SHALL BE HYDRAULICALLY CALCULATED BASED ON THE FOLLOWING CRITERIA

OCCUPANCY CLASSIFICATION: BUSINESS

HAZARD OCCUPANCY	LIGHT HAZARD
DESIGN DISCHARGE DENSITY	0.1 GPM/FT²
DESIGN AREA	1500 FT²
MAX AREA PER SPRINKLER	225 FT²
HOSE ALLOWANCE	100 GPM

2. SPRINKLER HEAD SHALL HAVE A ½ NOMINAL ORIFICE AND A TEMPERATURE RATING OF 155° F.

3. DROP NIPPLE SHALL BE A MINIMUM OF 1"

LEGEND & SYMBOLS

SYMBOLS	DESCRIPTIONS	SYMBOLS	DESCRIPTIONS
	ABOVE GROUND PIPE / UNDERGROUND PIPE		UPRIGHT SPRINKLER
	PIPE UP		4.5 Kg ABC DRY CHEMICAL FIRE EXTINGUISHER
	CAPPED PIPE		10 LBS HCFC 123 FIRE EXTINGUISHER
	PIPE DOWN		DIRECTION OF FLOW
	GATE VALVE		CONTINUOUS PIPE
	RISER NIPPLE		UNION PATENTE
CV	CHECK VALVE		PRESSURE GAUGE WITH COCK
RITV	REMOTE INSPECTOR TEST VALVE	FS	FLOW SWITCH
	END CAP FOR FUTURE CONNECTION		HOSE VALVE HEADER
FHC	FIRE HOSE CABINET	FPCP	FIRE PUMP CONTROLLER
	PUMP	JPCP	JOCKEY PUMP CONTROLLER
FM	FLOW METER		SUPERVISED OS & Y GATE VALVE
	PENDENT SPRINKLER		SIDEWALL SPRINKLER

EQUIPMENT SCHEDULE

MARK	QTY.	SERVICE	TYPE	LOCATION	PUMP RATING			MOTOR RATING				REMARKS
					CAP. (GPM)	TDH (ft)	RPM	HP	VOLTS	PH	HZ	
FP	1	FIRE PUMP	VERTICAL TURBINE	PUMP ROOM	500	268	1770	50	380	3	60	VERTICAL TURBINE PUMP SHALL BE COMPLETE WITH DISCHARGE HEAD ASSEMBLY, AIR RELEASE VALVE, PRESSURE GAUGE, COUPLED TO AN ELECTRIC MOTOR W/ WPI ENCLOSURE 445TP FRAME & OTHER STANDARD ACCESSORIES, THE PUMP SHALL DELIVER 150% OF RATED CAPACITY AT A PRESSURE OF NOT LESS THAN 65 % OF THE RATED PRESSURE, UL/FM APPROVED. FIRE PUMP SHALL BE CONNECTED TO THE EMERGENCY GENERATOR.
JP	1	JOCKEY PUMP	SUBMERSIBLE	PUMP ROOM	10	291	3500	2	380	3	60	SUBMERSIBLE PUMP, ELECTRIC DRIVEN MOTOR, COMPLETE WITH STANDARD ACCESSORIES, UL/FM APPROVED. JOCKEY PUMP SHALL BE CONNECTED LOAD TO THE EMERGENCY GENERATOR, ENCLOSURE SHALL BE AS PER MANUFACTURER RECOMMENDATION.
FPC	1	CONTROLLER	–	PUMP ROOM	–	–	–	–	380	3	60	FIRE PUMP CONTROLLER SHALL BE SUITED FOR FIRE PUMP SPECIFICATION REQUIREMENTS. IT SHALL BE WYE DELTA REDUCED VOLTAGE STARTING OPEN DURING TRANSITION FROM START TO RUN, CONTROLLERS SHALL BE FLOOR MOUNTED ON NEMA TYPE 4 ENCLOSURE TO INCLUDE PUMP OPERATING PILOT LIGHTS, PUMP FAIL TO START, PUMP OVERLOAD, ALARM, TEST TIMER WITH SOLENOID VALVE. UL/FM APPROVED.
JPC	1	CONTROLLER	–	PUMP ROOM	–	–	–	–	380	3	60	JOCKEY PUMP CONTROLLER SHALL BE SUITED FOR JOCKEY PUMP SPECIFICATION REQUIREMENTS. IT SHALL INCLUDE THE CIRCUIT BREAKER, OVERLOAD RELAY, PRESSURE SWITCH, RUNNING PERIOD TIMER, ALL NEMA TYPE ENCLOSURE, PRESSURE RECORDER, POWDER ON PILOT LIGHTS AND OTHER ACCESSORIES. UL/FM APPROVED.

ABBREVIATIONS

ABBREVIATION	DESCRIPTION	ABBREVIATION	DESCRIPTION	ABBREVIATION	DESCRIPTION
WFS	WATER FLOW SWITCH	GPM	GALLONS PER MINUTE	FPCP	FIRE PUMP CONTROL PANEL
ACV	ALARM CHECK VALVE	JPC	JOCKEY PUMP CONTROLLER	F	FLEXIBLE CONNECTOR
BV	BALL VALVE	C/W	COMPLETE WITH	SS	SUPERVISORY SWITCH
GV	GATE VALVE	M	METER	U/G	UNDERGROUND
FDC	FIRE DEPARTMENT CONNECTION	PRV	PRESSURE RELIEF VALVE	ACV	ALARM CHECK VALVE
FHC	FIRE HOSE CABINET	TYP	TYPICAL	T/A	TO ABOVE
PG	PRESSURE GAUGE	CV	CHECK VALVE	FC	FLUSHING CONNECTION
ITC	INSPECTOR TEST CONNECTION	RN	RISER NIPPLE	F/A	FROM ABOVE
AFSS	AUTOMATIC FIRE SPRINKLER SYSTEM				

a.c.ong CONSULTING INC.
Engineering + Management
ISO 9001:2015 Certified
2F LTA Building 118 Perea Street, Legaspi Village, 1229 Makati City, Philippines
Tel. Nos.: +63 2 8935827 Fax No.: +63 2 8935829
Email: acoconsulting@aco.com.ph Website: www.aco.com.ph

CERTIFIED BY
MARCIANO P. PAYUMO JR.
PROFESSIONAL MECHANICAL ENGINEER
REG. NO.: 5178
TIN NO. : 196–856–107
PTR NO. : 8967686
DATE : JANUARY 04, 2018
PLACE : PAMPANGA

OWNER: METROPOLITAN WATERWORKS AND SEWERAGE SYSTEM REGULATORY OFFICE
MWSS COMPOUND, KATIPUNAN AVENUE, MATANDANG BALARA, QUEZON CITY

PROJECT TITLE/LOCATION: 3-STOREY OFFICE BUILDING WITH ROOF DECK
MWSS COMPOUND, KATIPUNAN AVENUE, MATANDANG BALARA, QUEZON CITY

CLIENT
PROJECT PROPONENT: MELCHOR S. CORDOVA, ALTERNATE END–USER FOR RO BUILDING
APPROVED BY: PATRICK LESTER N. TY, CHIEF REGULATOR, MWSS RO

SHEET CONTENTS: DRAWING INDEX, GENERAL NOTES, DESIGN CRITERIA, LEGEND & SYMBOLS, EQUIPMENT SCHEDULE, ABBREVIATIONS

R.A. 9266 SEC. 33
DRAWINGS AND SPECIFICATIONS AND CONTRACT DOCUMENTS DULY SIGNED, STAMPED OR SEALED AS INSTRUMENTS FOR SERVICE ARE THE INTELLECTUAL PROPERTY AND DOCUMENTS OF ARCHITECT, WHETHER THE OBJECT FOR WHICH THEY ARE MADE IS EXECUTED OR NOT. IT SHALL BE UNLAWFUL FOR ANY PERSON TO DUPLICATE OR TO MAKE COPIES OF SAID DOCUMENTS FOR USE IN THE REPETITION OF AND FOR OTHER PROJECTS OR BUILDINGS, WHETHER EXECUTED PARTLY OR IN WHOLE, WITHOUT THE WRITTEN CONSENT OF THE ARCHITECT OR AUTHOR OF SAID DOCUMENTS.

CADD	DATE	NO.	REVISIONS	CHK	DATE	PAPER SIZE	SHEET NO.
RDGL	JUL 2018					20X30	F-0000
DESIGNED	DATE					SCALE	PROJECT NO.
EAPB	JUL 2018					AS SHOWN	SO-G-17-036
APPROVED	DATE						
CCA	JUL 2018						

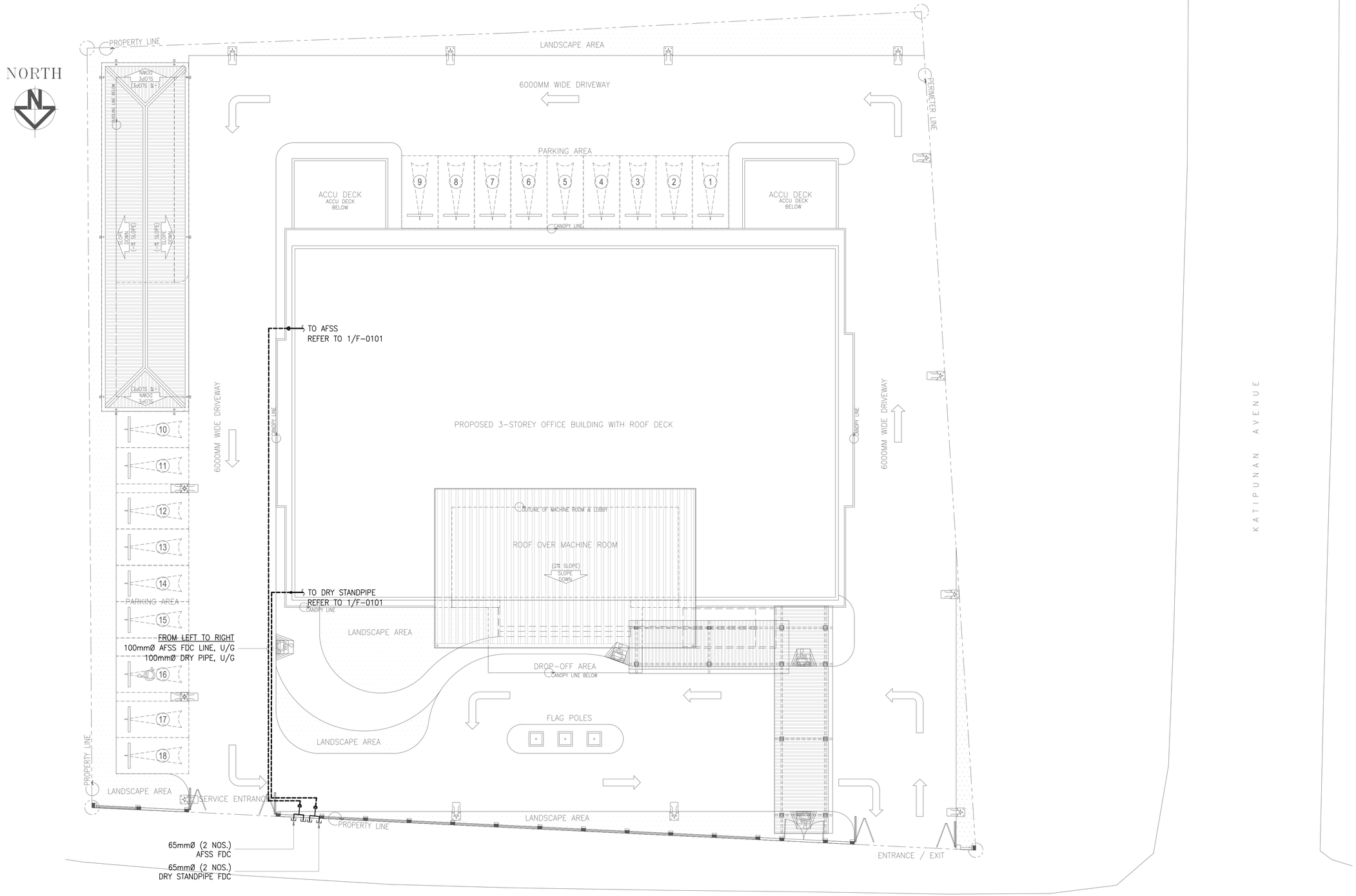

SITE DEVELOPMENT FIRE PROTECTION LAYOUT

1 / F-0001

SCALE 1:150M

a.c.ong CONSULTING INC.
Engineering + Management
ISO 9001:2015 Certified
2F LTA Building 118 Perea Street, Legaspi Village, 1229 Makati City, Philippines
Tel. Nos.: +63 2 8935827 Fax No.: +63 2 8935829
Email: acoconsulting@aco.com.ph Website: www.aco.com.ph

CERTIFIED BY	
MARCIANO P. PAYUMO JR.	REG. NO.: 5178
PROFESSIONAL MECHANICAL ENGINEER	TIN NO. : 196-856-107
	PTR NO. : 8967686
	DATE : JANUARY 04, 2018
	PLACE : PAMPANGA

OWNER: METROPOLITAN WATERWORKS AND SEWERAGE SYSTEM REGULATORY OFFICE
MWSS COMPOUND, KATIPUNAN AVENUE, MATANDANG BALARA, QUEZON CITY

PROJECT TITLE/LOCATION: 3-STOREY OFFICE BUILDING WITH ROOF DECK
MWSS COMPOUND, KATIPUNAN AVENUE, MATANDANG BALARA, QUEZON CITY

CLIENT

PROJECT PROPONENT	APPROVED BY:
MELCHOR S. CORDOVA	PATRICK LESTER N. TY
ALTERNATE END-USER FOR RO BUILDING	CHIEF REGULATOR, MWSS RO

SHEET CONTENTS: SITE DEVELOPMENT FIRE PROTECTION LAYOUT

R.A. 9266 SEC. 33
DRAWINGS AND SPECIFICATIONS AND CONTRACT DOCUMENTS DULY SIGNED, STAMPED OR SEALED AS INSTRUMENTS FOR SERVICE ARE THE INTELLECTUAL PROPERTY AND DOCUMENTS OF ARCHITECT, WHETHER THE OBJECT FOR WHICH THEY ARE MADE IS EXECUTED OR NOT. IT SHALL BE UNLAWFUL FOR ANY PERSON TO DUPLICATE OR TO MAKE COPIES OF SAID DOCUMENTS FOR USE IN THE REPETITION OF AND FOR OTHER PROJECTS OR BUILDINGS, WHETHER EXECUTED PARTLY OR IN WHOLE, WITHOUT THE WRITTEN CONSENT OF THE ARCHITECT OR AUTHOR OF SAID DOCUMENTS.

CADD	DATE	NO.	REVISIONS	CHK	DATE	PAPER SIZE	SHEET NO.
RDGL	JUL 2018					20X30	F-0001
DESIGNED	DATE					SCALE	PROJECT NO.
EAPB	JUL 2018					AS SHOWN	SO-G-17-036
APPROVED	DATE						
CCA	JUL 2018						

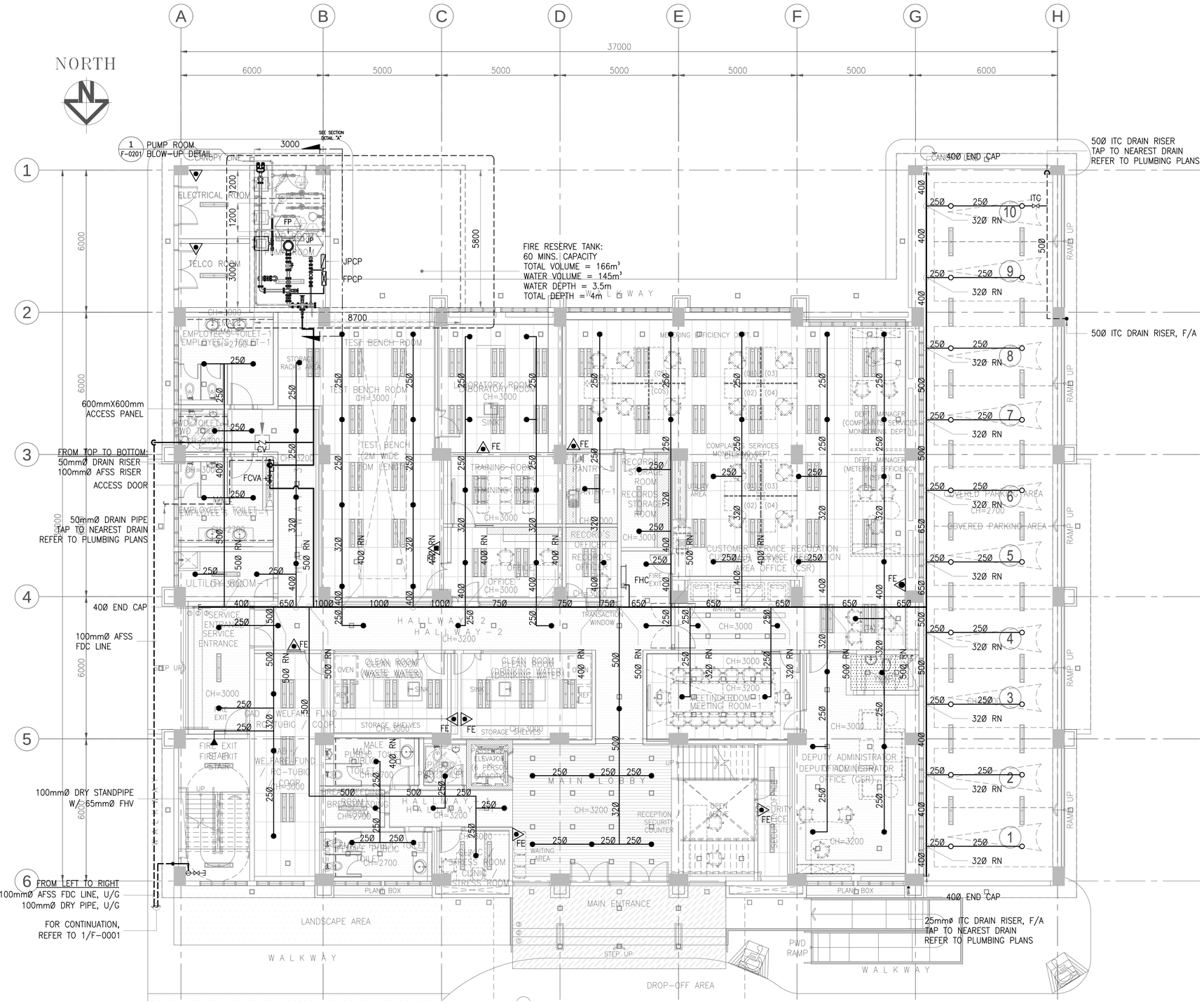

GROUND FLOOR FIRE PROTECTION LAYOUT

1 / F-0101

SCALE 1:100M

a.C.ONG CONSULTING INC. Engineering + Management ISO 9001:2015 Certified 2F LTA Building 118 Perea Street, Legaspi Village, 1229 Makati City, Philippines Tel. Nos.: +63 2 8935827 Fax No.: +63 2 8935829 Email: acoconsulting@aco.com.ph Website: www.aco.com.ph	CERTIFIED BY MARCIANO P. PAYUMO JR. PROFESSIONAL MECHANICAL ENGINEER	REG. NO.: 5178 TIN NO. : 196-856-107 PTR NO. : 8967686 DATE : JANUARY 04, 2018 PLACE : PAMPANGA	OWNER METROPOLITAN WATERWORKS AND SEWERAGE SYSTEM REGULATORY OFFICE MWSS COMPOUND, KATIPUNAN AVENUE, MATANDANG BALARA, QUEZON CITY	PROJECT TITLE/LOCATION 3-STOREY OFFICE BUILDING WITH ROOF DECK MWSS COMPOUND, KATIPUNAN AVENUE, MATANDANG BALARA, QUEZON CITY	CLIENT PROJECT PROPONENT MELCHOR S. CORDOVA ALTERNATE END-USER FOR RO BUILDING	APPROVED BY: PATRICK LESTER N. TY CHIEF REGULATOR, MWSS RO	SHEET CONTENTS GROUND FLOOR FIRE PROTECTION LAYOUT	R.A. 9266 SEC. 33 DRAWINGS AND SPECIFICATIONS AND CONTRACT DOCUMENTS DULY SIGNED, STAMPED OR SEALED AS INSTRUMENTS FOR SERVICE ARE THE INTELLECTUAL PROPERTY AND DOCUMENTS OF ARCHITECT, WHETHER THE OBJECT FOR WHICH THEY ARE MADE IS EXECUTED OR NOT. IT SHALL BE UNLAWFUL FOR ANY PERSON TO DUPLICATE OR TO MAKE COPIES OF SAID DOCUMENTS FOR USE IN THE REPETITION OF AND FOR OTHER PROJECTS OR BUILDINGS, WHETHER EXECUTED PARTLY OR IN WHOLE, WITHOUT THE WRITTEN CONSENT OF THE ARCHITECT OR AUTHOR OF SAID DOCUMENTS.	CADD RDGL DESIGNED EAPB APPROVED CCA	DATE JUL 2018 DATE JUL 2018 DATE JUL 2018	NO.	REVISIONS	CHK	DATE	PAPER SIZE 20X30 SCALE AS SHOWN	SHEET NO. F-0101 PROJECT NO. SO-G-17-036

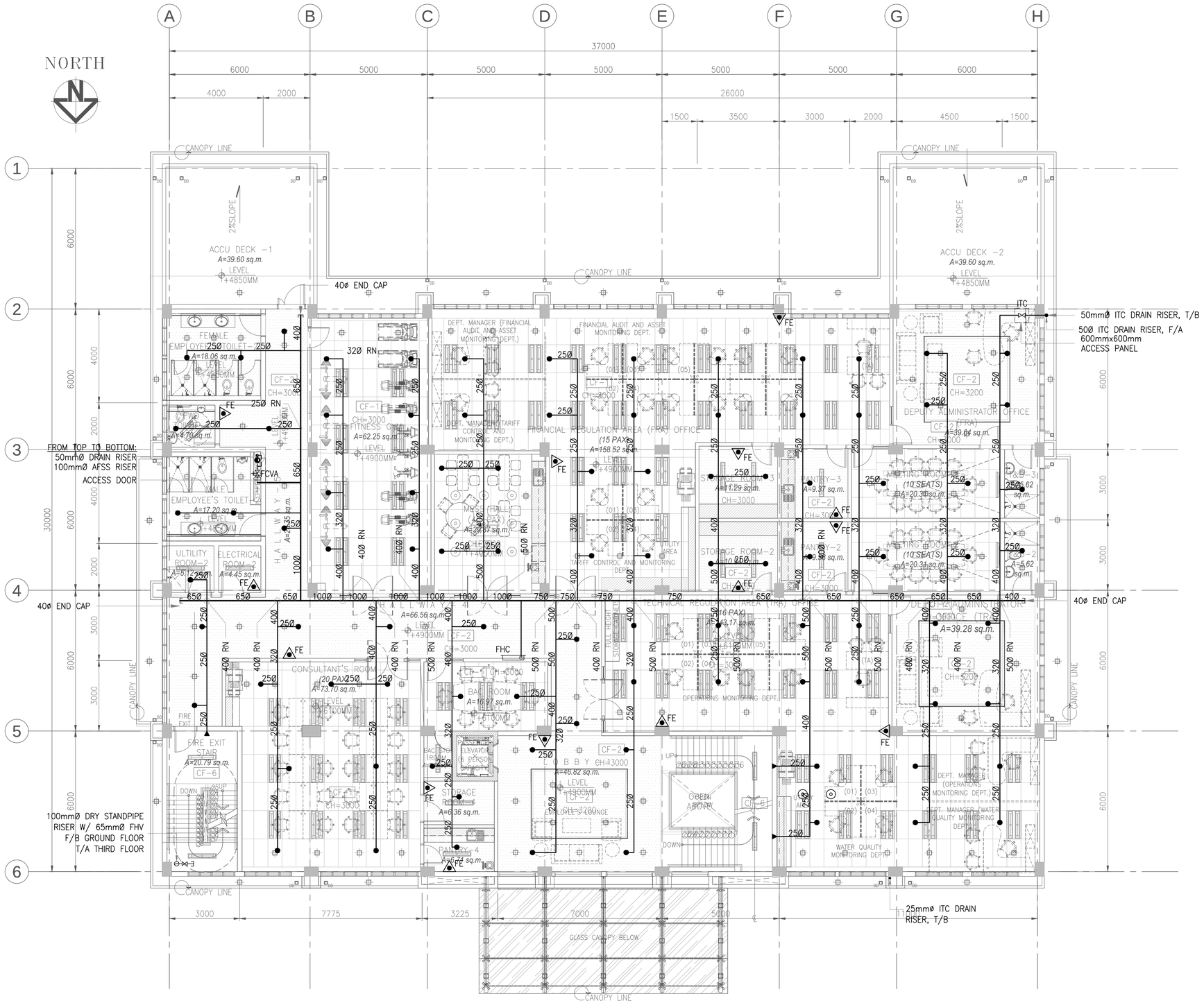

I — SECOND FLOOR FIRE PROTECTION LAYOUT

F–0102

SCALE 1:100M

a.c.ONG CONSULTING INC. Engineering + Management ISO 9001:2015 Certified 2F LTA Building 118 Perea Street, Legaspi Village, 1229 Makati City, Philippines Tel. Nos.: +63 2 8935827 Fax No.: +63 2 8935829 Email: acoconsulting@aco.com.ph Website: www.aco.com.ph	CERTIFIED BY MARCIANO P. PAYUMO JR. PROFESSIONAL MECHANICAL ENGINEER	REG. NO.: 5178 TIN NO. : 196–856–107 PTR NO. : 8967686 DATE : JANUARY 04, 2018 PLACE : PAMPANGA	OWNER METROPOLITAN WATERWORKS AND SEWERAGE SYSTEM REGULATORY OFFICE MWSS COMPOUND, KATIPUNAN AVENUE, MATANDANG BALARA, QUEZON CITY	PROJECT TITLE/LOCATION 3-STOREY OFFICE BUILDING WITH ROOF DECK MWSS COMPOUND, KATIPUNAN AVENUE, MATANDANG BALARA, QUEZON CITY	CLIENT PROJECT PROPONENT MELCHOR S. CORDOVA ALTERNATE END–USER FOR RO BUILDING	APPROVED BY: PATRICK LESTER N. TY CHIEF REGULATOR, MWSS RO	SHEET CONTENTS SECOND FLOOR FIRE PROTECTION LAYOUT	R.A. 9266 SEC. 33 DRAWINGS AND SPECIFICATIONS AND CONTRACT DOCUMENTS DULY SIGNED, STAMPED OR SEALED AS INSTRUMENTS FOR SERVICE ARE THE INTELLECTUAL PROPERTY AND DOCUMENTS OF ARCHITECT, WHETHER THE OBJECT FOR WHICH THEY ARE MADE IS EXECUTED OR NOT. IT SHALL BE UNLAWFUL FOR ANY PERSON TO DUPLICATE OR TO MAKE COPIES OF SAID DOCUMENTS FOR USE IN THE REPETITION OF AND FOR OTHER PROJECTS OR BUILDINGS, WHETHER EXECUTED PARTLY OR IN WHOLE, WITHOUT THE WRITTEN CONSENT OF THE ARCHITECT OR AUTHOR OF SAID DOCUMENTS.	CADD RDGL DESIGNED EAPB APPROVED CCA	DATE JUL 2018 DATE JUL 2018 DATE JUL 2018	NO.	REVISIONS	CHK	DATE	PAPER SIZE 20X30 SCALE AS SHOWN	SHEET NO. F-0102 PROJECT NO. SO-G-17-036

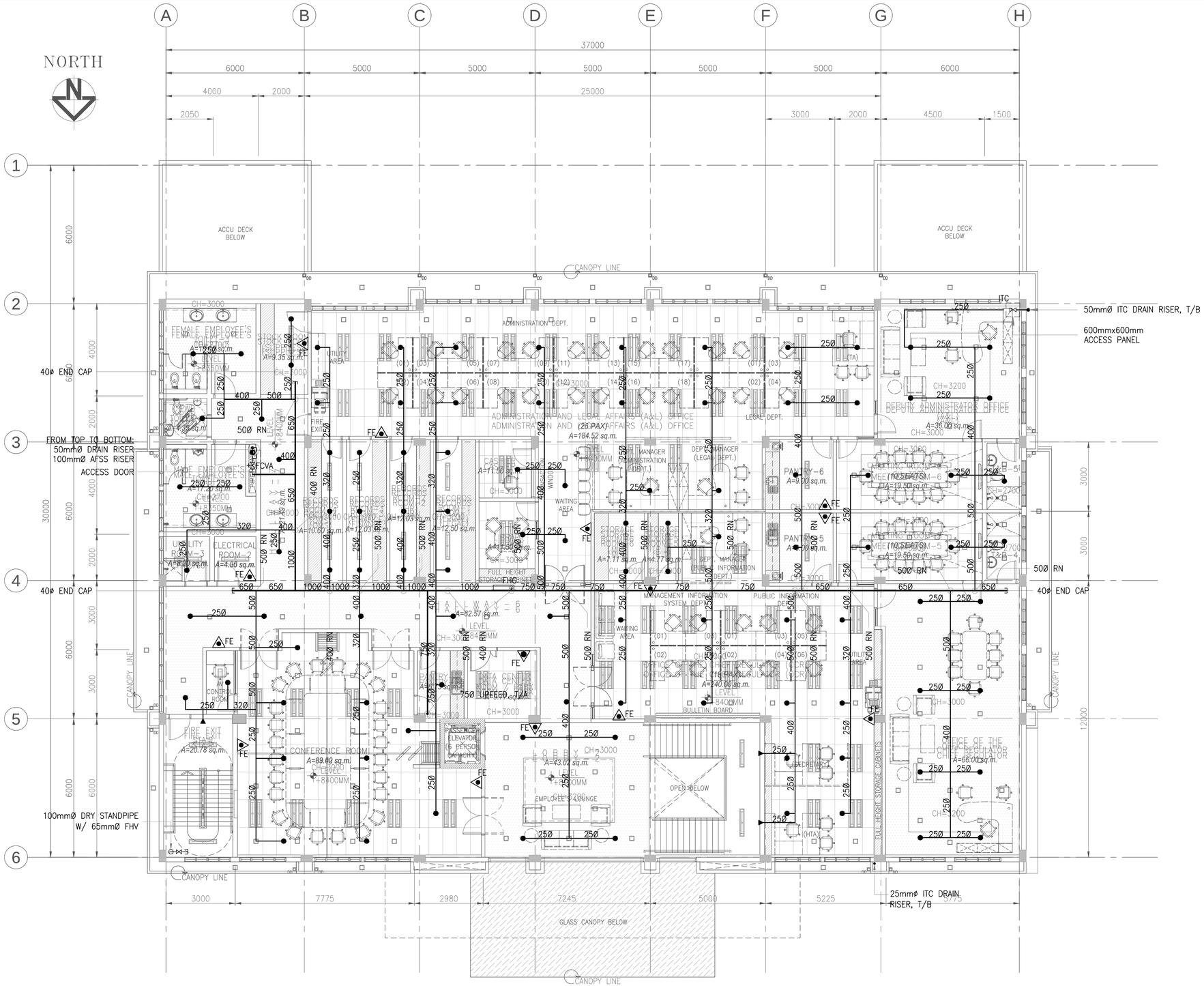

THIRD FLOOR FIRE PROTECTION LAYOUT

I / F-0103 SCALE 1:100M

a.c.ONG CONSULTING INC.
Engineering + Management
ISO 9001:2015 Certified
2F LTA Building 118 Perea Street, Legaspi Village, 1229 Makati City, Philippines
Tel. Nos.: +63 2 8935827 Fax No.: +63 2 8935829
Email: acoconsulting@aco.com.ph Website: www.aco.com.ph

CERTIFIED BY
MARCIANO P. PAYUMO JR.
PROFESSIONAL MECHANICAL ENGINEER
REG. NO.: 5178
TIN NO. : 196-856-107
PTR NO. : 8967686
DATE : JANUARY 04, 2018
PLACE : PAMPANGA

OWNER: METROPOLITAN WATERWORKS AND SEWERAGE SYSTEM REGULATORY OFFICE
MWSS COMPOUND, KATIPUNAN AVENUE, MATANDANG BALARA, QUEZON CITY

PROJECT TITLE/LOCATION: 3-STOREY OFFICE BUILDING WITH ROOF DECK
MWSS COMPOUND, KATIPUNAN AVENUE, MATANDANG BALARA, QUEZON CITY

CLIENT
PROJECT PROPONENT: MELCHOR S. CORDOVA, ALTERNATE END-USER FOR RO BUILDING
APPROVED BY: PATRICK LESTER N. TY, CHIEF REGULATOR, MWSS RO

SHEET CONTENTS: THIRD FLOOR FIRE PROTECTION LAYOUT

R.A. 9266 SEC. 33
DRAWINGS AND SPECIFICATIONS AND CONTRACT DOCUMENTS DULY SIGNED, STAMPED OR SEALED AS INSTRUMENTS FOR SERVICE ARE THE INTELLECTUAL PROPERTY AND DOCUMENTS OF ARCHITECT, WHETHER THE OBJECT FOR WHICH THEY ARE MADE IS EXECUTED OR NOT. IT SHALL BE UNLAWFUL FOR ANY PERSON TO DUPLICATE OR TO MAKE COPIES OF SAID DOCUMENTS FOR USE IN THE REPETITION OF AND FOR OTHER PROJECTS OR BUILDINGS, WHETHER EXECUTED PARTLY OR IN WHOLE, WITHOUT THE WRITTEN CONSENT OF THE ARCHITECT OR AUTHOR OF SAID DOCUMENTS.

CADD	DATE	NO.	REVISIONS	CHK	DATE	PAPER SIZE	SHEET NO.
RDGL	JUL 2018					20X30	F-0103
DESIGNED	DATE					SCALE	PROJECT NO.
EAPB	JUL 2018					AS SHOWN	SO-G-17-036
APPROVED	DATE						
CCA	JUL 2018						

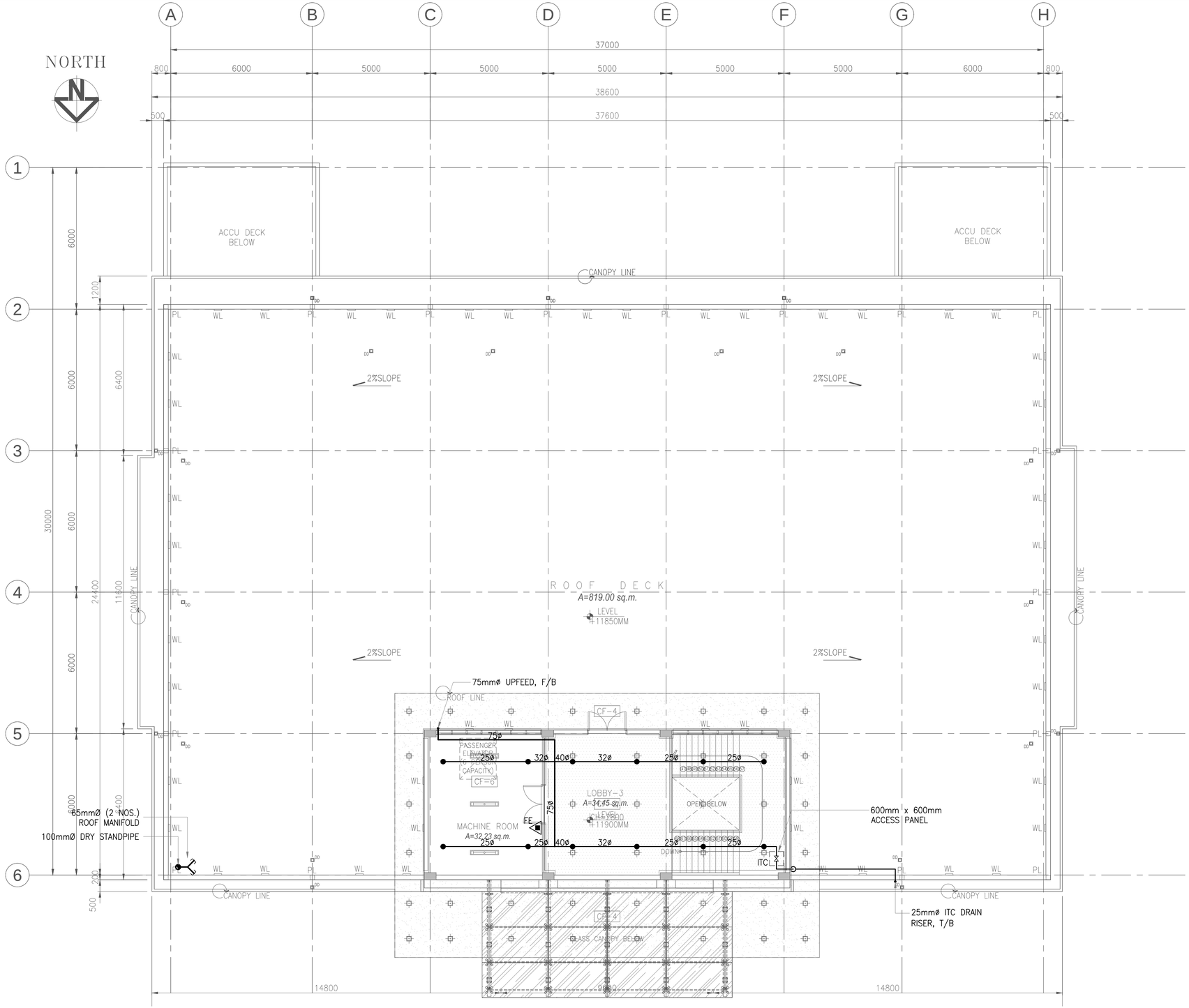

ROOF DECK FIRE PROTECTION LAYOUT

I
F-0104

SCALE 1:100M

a.c.ong CONSULTING INC.
Engineering + Management
ISO 9001:2015 Certified
2F LTA Building 118 Perea Street, Legaspi Village, 1229 Makati City, Philippines
Tel. Nos.: +63 2 8935827 Fax No.: +63 2 8935829
Email: acoconsulting@aco.com.ph Website: www.aco.com.ph

CERTIFIED BY

MARCIANO P. PAYUMO JR.
PROFESSIONAL MECHANICAL ENGINEER

REG. NO.: 5178
TIN NO. : 196-856-107
PTR NO. : 8967686
DATE : JANUARY 04, 2018
PLACE : PAMPANGA

OWNER
METROPOLITAN WATERWORKS AND SEWERAGE SYSTEM REGULATORY OFFICE
MWSS COMPOUND, KATIPUNAN AVENUE, MATANDANG BALARA, QUEZON CITY

PROJECT TITLE/LOCATION
3-STOREY OFFICE BUILDING WITH ROOF DECK
MWSS COMPOUND, KATIPUNAN AVENUE, MATANDANG BALARA, QUEZON CITY

CLIENT
PROJECT PROPONENT
MELCHOR S. CORDOVA
ALTERNATE END-USER FOR RO BUILDING

APPROVED BY:
PATRICK LESTER N. TY
CHIEF REGULATOR, MWSS RO

SHEET CONTENTS
ROOF DECK FIRE PROTECTION LAYOUT

R.A. 9266 SEC. 33
DRAWINGS AND SPECIFICATIONS AND CONTRACT DOCUMENTS DULY SIGNED, STAMPED OR SEALED AS INSTRUMENTS FOR SERVICE ARE THE INTELLECTUAL PROPERTY AND DOCUMENTS OF ARCHITECT, WHETHER THE OBJECT FOR WHICH THEY ARE MADE IS EXECUTED OR NOT. IT SHALL BE UNLAWFUL FOR ANY PERSON TO DUPLICATE OR TO MAKE COPIES OF SAID DOCUMENTS FOR USE IN THE REPETITION OF AND FOR OTHER PROJECTS OR BUILDINGS, WHETHER EXECUTED PARTLY OR IN WHOLE, WITHOUT THE WRITTEN CONSENT OF THE ARCHITECT OR AUTHOR OF SAID DOCUMENTS.

CADD	DATE	NO.	REVISIONS	CHK	DATE	PAPER SIZE	SHEET NO.
RDGL	JUL 2018					20X30	F-0104
DESIGNED	DATE					SCALE	PROJECT NO.
EAPB	JUL 2018					AS SHOWN	SO-G-17-036
APPROVED	DATE						
CCA	JUL 2018						

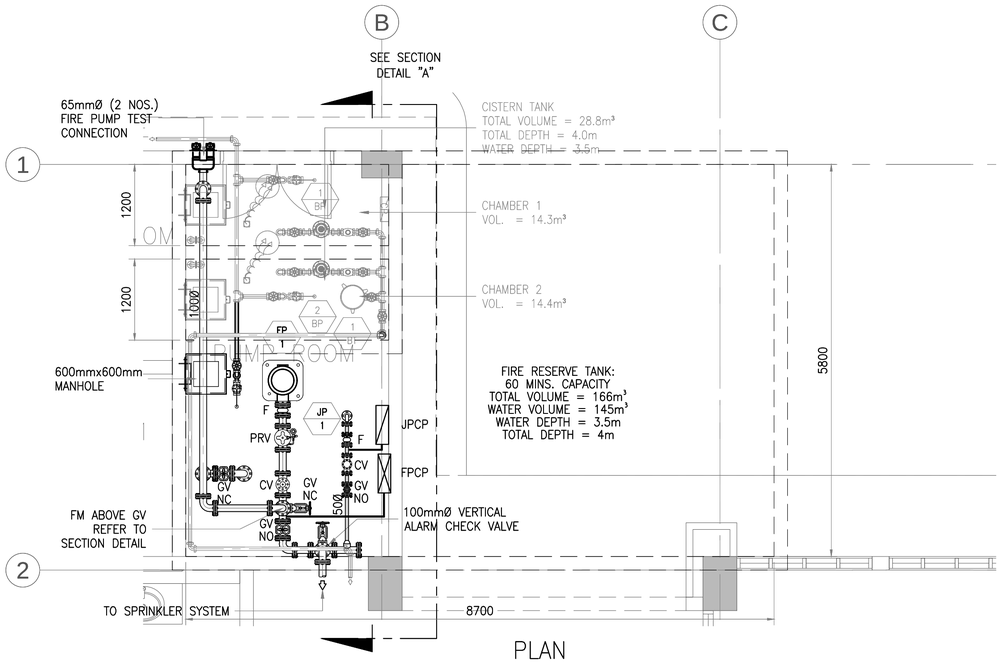

PLAN

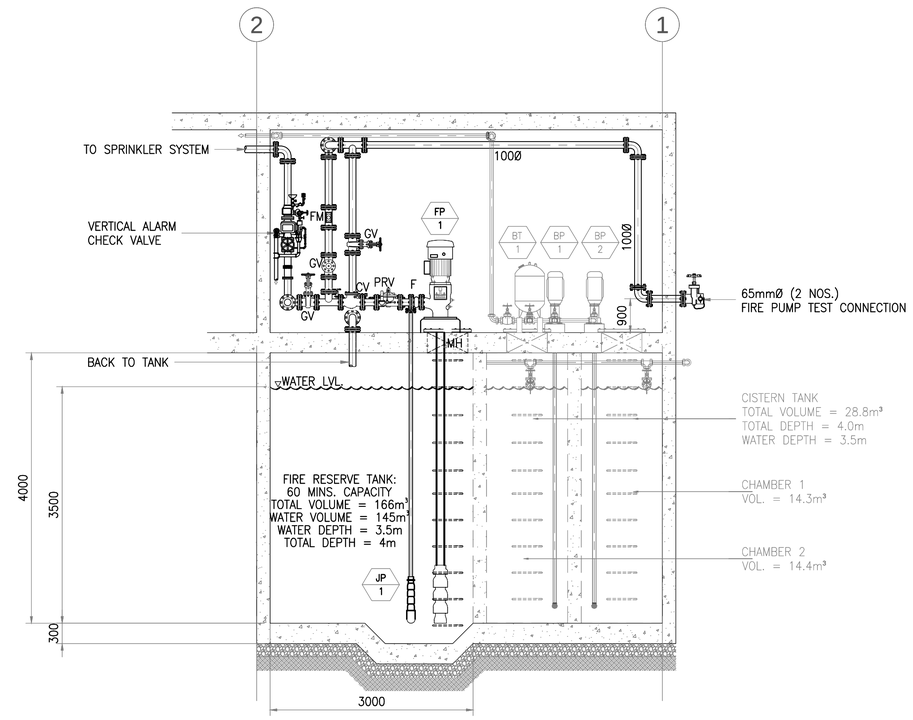

SECTION–A

FIRE PUMP BLOW-UP DETAIL & SECTION

I / F–0201 SCALE 1:50M

a.c.ong CONSULTING INC. Engineering + Management ISO 9001:2015 Certified 2F LTA Building 118 Perea Street, Legaspi Village, 1229 Makati City, Philippines Tel. Nos.: +63 2 8935827 Fax No.: +63 2 8935829 Email: acoconsulting@aco.com.ph Website: www.aco.com.ph	CERTIFIED BY MARCIANO P. PAYUMO JR. PROFESSIONAL MECHANICAL ENGINEER	REG. NO.: 5178 TIN NO. : 196–856–107 PTR NO. : 8967686 DATE : JANUARY 04, 2018 PLACE : PAMPANGA	OWNER METROPOLITAN WATERWORKS AND SEWERAGE SYSTEM REGULATORY OFFICE MWSS COMPOUND, KATIPUNAN AVENUE, MATANDANG BALARA, QUEZON CITY	PROJECT TITLE/LOCATION 3-STOREY OFFICE BUILDING WITH ROOF DECK MWSS COMPOUND, KATIPUNAN AVENUE, MATANDANG BALARA, QUEZON CITY	CLIENT PROJECT PROPONENT MELCHOR S. CORDOVA ALTERNATE END–USER FOR RO BUILDING	APPROVED BY: PATRICK LESTER N. TY CHIEF REGULATOR, MWSS RO	SHEET CONTENTS FIRE PUMP BLOW-UP DETAIL & SECTION	R.A. 9266 SEC. 33 DRAWINGS AND SPECIFICATIONS AND CONTRACT DOCUMENTS DULY SIGNED, STAMPED OR SEALED AS INSTRUMENTS FOR SERVICE ARE THE INTELLECTUAL PROPERTY AND DOCUMENTS OF ARCHITECT, WHETHER THE OBJECT FOR WHICH THEY ARE MADE IS EXECUTED OR NOT. IT SHALL BE UNLAWFUL FOR ANY PERSON TO DUPLICATE OR TO MAKE COPIES OF SAID DOCUMENTS FOR USE IN THE REPETITION OF AND FOR OTHER PROJECTS OR BUILDINGS, WHETHER EXECUTED PARTLY OR IN WHOLE, WITHOUT THE WRITTEN CONSENT OF THE ARCHITECT OR AUTHOR OF SAID DOCUMENTS.	CADD RDGL DESIGNED EAPB APPROVED CCA	DATE JUL 2018 DATE JUL 2018 DATE JUL 2018	NO.	REVISIONS	CHK	DATE	PAPER SIZE 20X30 SCALE AS SHOWN	SHEET NO. F-0201 PROJECT NO. SO-G-17-036

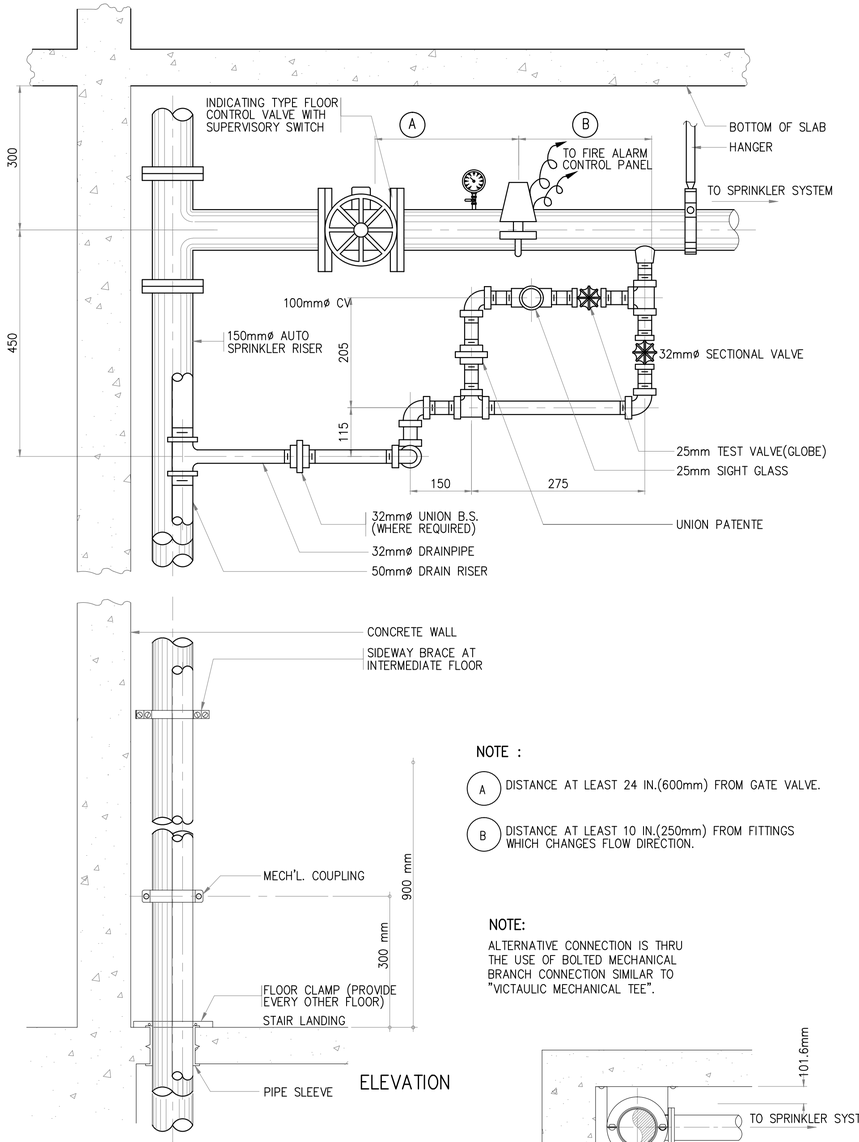

NOTE :

(A) DISTANCE AT LEAST 24 IN.(600mm) FROM GATE VALVE.

(B) DISTANCE AT LEAST 10 IN.(250mm) FROM FITTINGS WHICH CHANGES FLOW DIRECTION.

NOTE:

ALTERNATIVE CONNECTION IS THRU THE USE OF BOLTED MECHANICAL BRANCH CONNECTION SIMILAR TO "VICTAULIC MECHANICAL TEE".

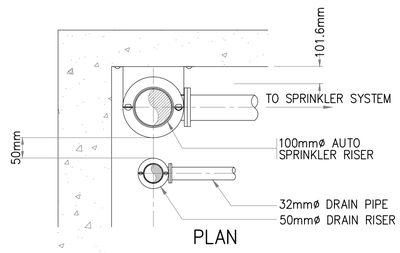

1 F-0202 FLOOR CONTROL VALVE ASSEMBLY DETAIL

SCALE NTS

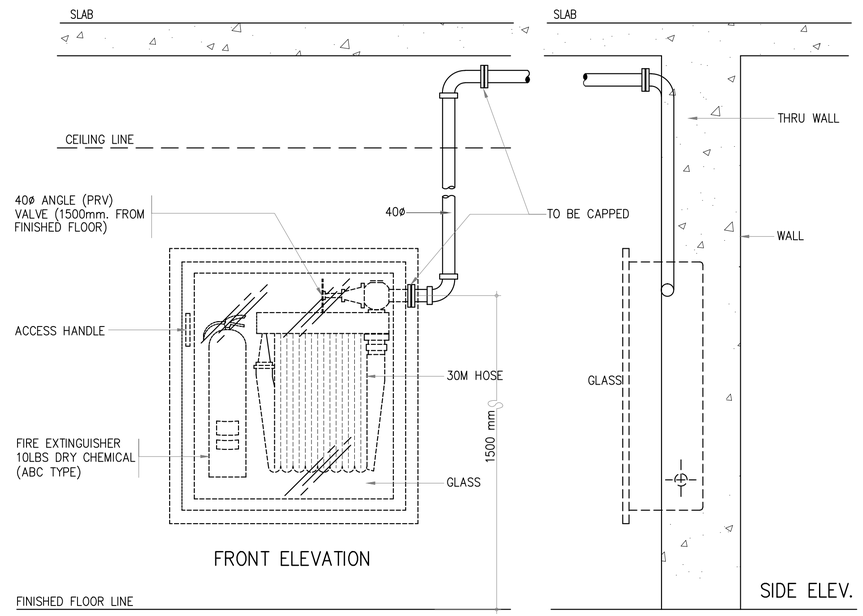

2 F-0202 FIRE HOSE CABINET WITH FIRE EXTINGUISHER DETAIL

SCALE NTS

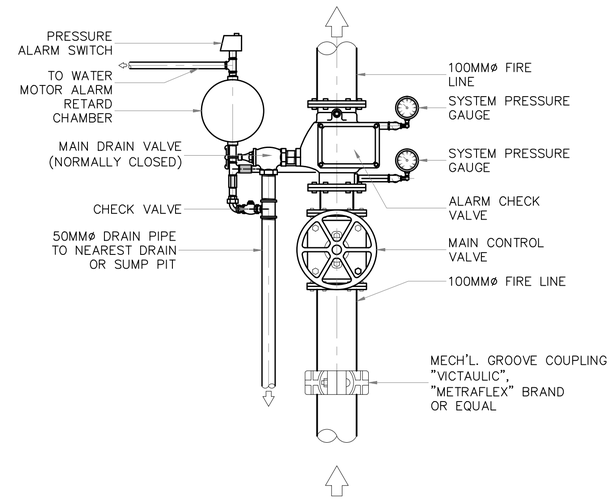

3 F-0202 ALARM CHECK VALVE RISER DETAIL

SCALE NTS

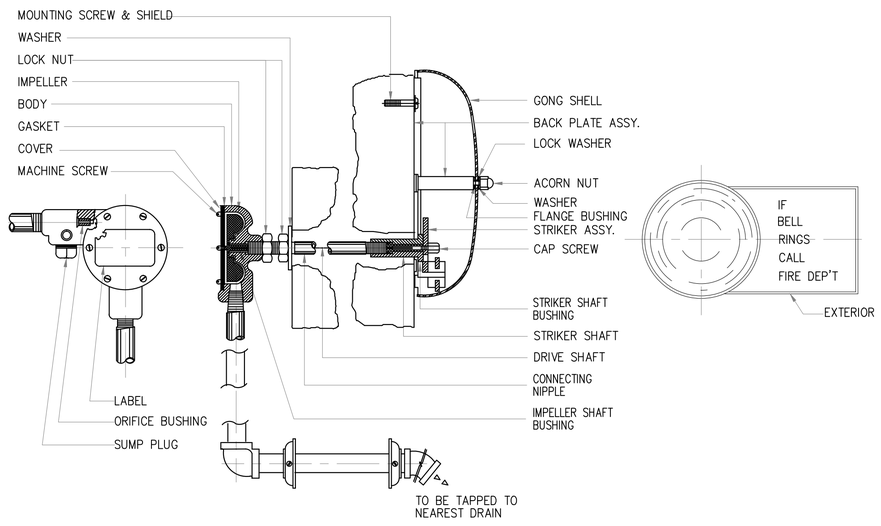

4 F-0202 ALARM MOTOR GONG DETAIL

SCALE NTS

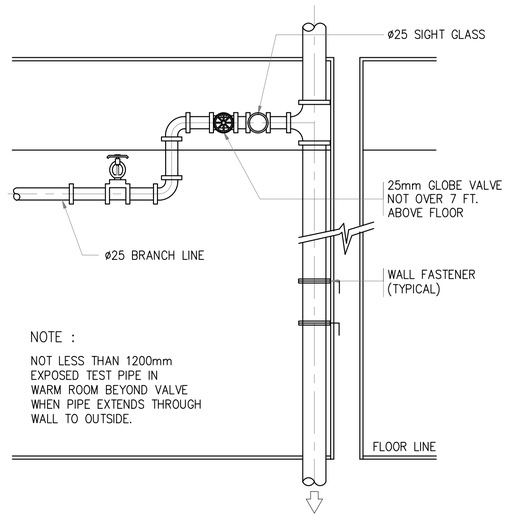

NOTE :

NOT LESS THAN 1200mm EXPOSED TEST PIPE IN WARM ROOM BEYOND VALVE WHEN PIPE EXTENDS THROUGH WALL TO OUTSIDE.

5 F-0202 INSPECTOR TEST CONNECTION DETAIL

SCALE NTS

a.C.ONG CONSULTING INC.
Engineering + Management
ISO 9001:2015 Certified
2F LTA Building 118 Perea Street, Legaspi Village, 1229 Makati City, Philippines
Tel. Nos.: +63 2 8935827 Fax No.: +63 2 8935829
Email: acoconsulting@aco.com.ph Website: www.aco.com.ph

CERTIFIED BY: MARCIANO P. PAYUMO JR., PROFESSIONAL MECHANICAL ENGINEER
REG. NO.: 5178
TIN NO. : 196-856-107
PTR NO. : 8967686
DATE : JANUARY 04, 2018
PLACE : PAMPANGA

OWNER: METROPOLITAN WATERWORKS AND SEWERAGE SYSTEM REGULATORY OFFICE
MWSS COMPOUND, KATIPUNAN AVENUE, MATANDANG BALARA, QUEZON CITY

PROJECT TITLE/LOCATION: 3-STOREY OFFICE BUILDING WITH ROOF DECK
MWSS COMPOUND, KATIPUNAN AVENUE, MATANDANG BALARA, QUEZON CITY

CLIENT
PROJECT PROPONENT: MELCHOR S. CORDOVA, ALTERNATE END-USER FOR RO BUILDING
APPROVED BY: PATRICK LESTER N. TY, CHIEF REGULATOR, MWSS RO

SHEET CONTENTS: MISCELLANEOUS DETAIL (PART 1 OF 3)

R.A. 9266 SEC. 33
DRAWINGS AND SPECIFICATIONS AND CONTRACT DOCUMENTS DULY SIGNED, STAMPED OR SEALED AS INSTRUMENTS FOR SERVICE ARE THE INTELLECTUAL PROPERTY AND DOCUMENTS OF ARCHITECT, WHETHER THE OBJECT FOR WHICH THEY ARE MADE IS EXECUTED OR NOT. IT SHALL BE UNLAWFUL FOR ANY PERSON TO DUPLICATE OR TO MAKE COPIES OF SAID DOCUMENTS FOR USE IN THE REPETITION OF AND FOR OTHER PROJECTS OR BUILDINGS, WHETHER EXECUTED PARTLY OR IN WHOLE, WITHOUT THE WRITTEN CONSENT OF THE ARCHITECT OR AUTHOR OF SAID DOCUMENTS.

CADD	DATE	NO.	REVISIONS	CHK	DATE	PAPER SIZE	SHEET NO.
RDGL	JUL 2018					20X30	F-0202
DESIGNED	DATE					SCALE	PROJECT NO.
EAPB	JUL 2018					AS SHOWN	SO-G-17-036
APPROVED	DATE						
CCA	JUL 2018						

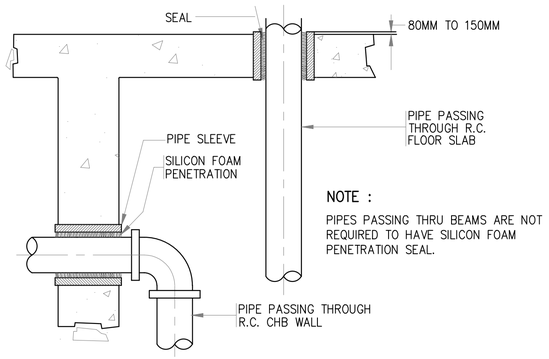

NOTE :

PIPES PASSING THRU BEAMS ARE NOT REQUIRED TO HAVE SILICON FOAM PENETRATION SEAL.

PIPE SIZE (MM)	SLEEVE SIZE (MM)	PIPE SIZE (MM)	SLEEVE SIZE (MM)
25	50	80	125
32	65	100	200
40	80	125	200
50	100	150	200
65	125	200	300

1 F-0203 PIPE SLEEVE DETAIL

SCALE NTS

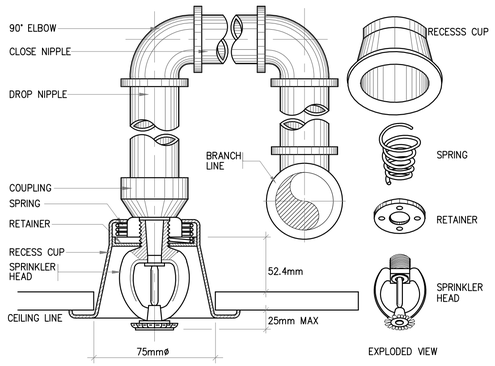

2 F-0203 PENDENT TYPE SPRINKLER HEAD DETAIL

SCALE NTS

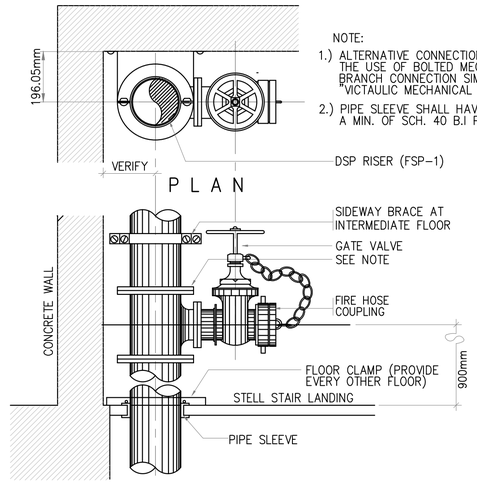

NOTE:

1.) ALTERNATIVE CONNECTION IS THRU THE USE OF BOLTED MECHANICAL BRANCH CONNECTION SIMILAR TO "VICTAULIC MECHANICAL TEE".

2.) PIPE SLEEVE SHALL HAVE A MIN. OF SCH. 40 B.I PIPE

3 F-0203 DRY STANDPIPE RISER DETAIL

SCALE NTS

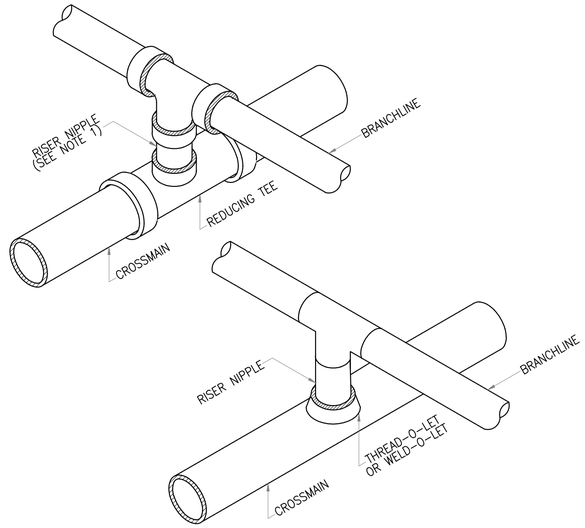

NOTE :

1. ALTERNATIVE CONNECTION IS THRU THE USE OF BOLTED MECHANICAL BRANCH CONNECTION SIMILAR TO MECHANICAL TEE
2. THE USE OF THREADOLET BRANCH CONNECTION FOR SMALLER PIPE SIZES FROM 2" TO 1" IS ACCEPTABLE.
3. THE USE OF WELDOLET BRANCH CONNECTION FOR PIPE SIZES 2-1/2" IS ACCEPTABLE

4 F-0203 CROSSMAIN TO BRANCHLINE CONNECTION DETAIL

SCALE NTS

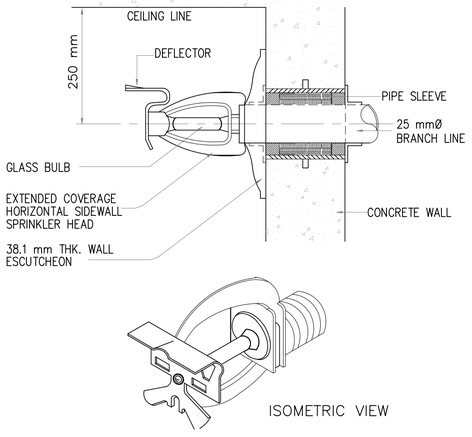

5 F-0203 SIDEWALL SPRINKLER DETAIL

SCALE NTS

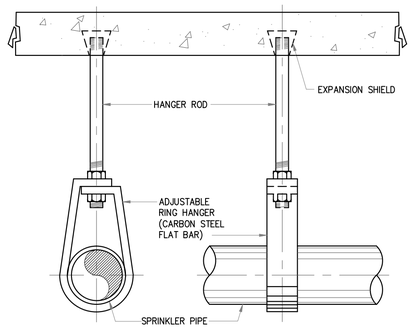

PIPE SIZE (MM)	ROD SIZE (MM)	SIZE OF STEEL FLAT BAR (MM)	PIPE SIZE (MM)	ROD SIZE (MM)	SIZE OF STEEL FLAT BAR (MM)
15	10	3.2x25	65	12	5x32
20	10	3.2x25	80	12	5x32
25	10	3.2x25	100	16	5x32
32	10	3.2x25	125	16	5x32
40	10	3.2x25	150	20	5x40
50	10	3.2x25	200	22	5x50

6 F-0203 PIPE HANGER DETAIL

SCALE NTS

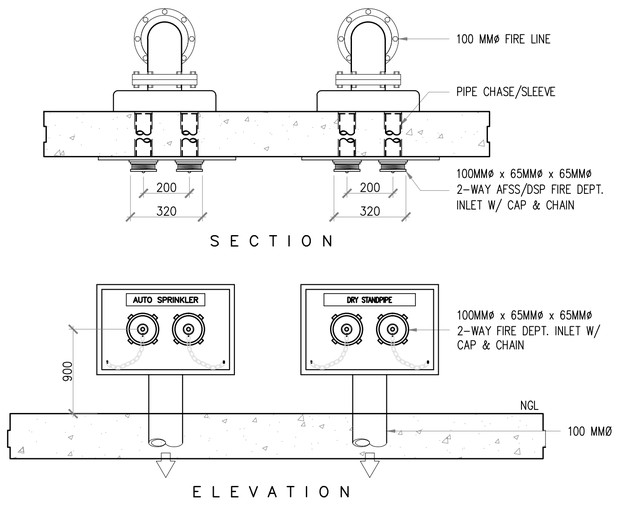

7 F-0203 FIRE DEPARTMENT CONNECTION DETAIL

SCALE NTS

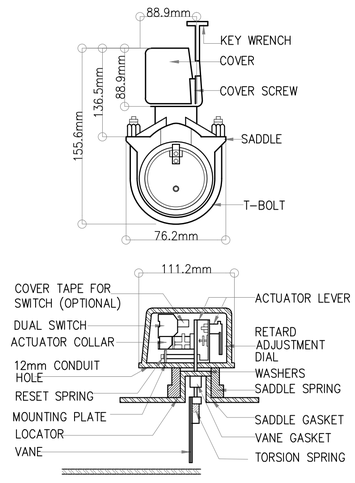

8 F-0203 WATER FLOW SWITCH DETAIL

SCALE NTS

a.C.ONG CONSULTING INC.
Engineering + Management
ISO 9001:2015 Certified
2F LTA Building 118 Perea Street, Legaspi Village, 1229 Makati City, Philippines
Tel. Nos.: +63 2 8935827 Fax No.: +63 2 8935829
Email: acoconsulting@aco.com.ph Website: www.aco.com.ph

CERTIFIED BY

MARCIANO P. PAYUMO JR.
PROFESSIONAL MECHANICAL ENGINEER

REG. NO.: 5178
TIN NO. : 196-856-107
PTR NO. : 8967686
DATE : JANUARY 04, 2018
PLACE : PAMPANGA

OWNER: METROPOLITAN WATERWORKS AND SEWERAGE SYSTEM REGULATORY OFFICE
MWSS COMPOUND, KATIPUNAN AVENUE, MATANDANG BALARA, QUEZON CITY

PROJECT TITLE/LOCATION: 3-STOREY OFFICE BUILDING WITH ROOF DECK
MWSS COMPOUND, KATIPUNAN AVENUE, MATANDANG BALARA, QUEZON CITY

CLIENT
PROJECT PROPONENT: MELCHOR S. CORDOVA, ALTERNATE END-USER FOR RO BUILDING
APPROVED BY: PATRICK LESTER N. TY, CHIEF REGULATOR, MWSS RO

SHEET CONTENTS: MISCELLANEOUS DETAIL (PART 2 OF 3)

R.A. 9266 SEC. 33
DRAWINGS AND SPECIFICATIONS AND CONTRACT DOCUMENTS DULY SIGNED, STAMPED OR SEALED AS INSTRUMENTS FOR SERVICE ARE THE INTELLECTUAL PROPERTY AND DOCUMENTS OF ARCHITECT, WHETHER THE OBJECT FOR WHICH THEY ARE MADE IS EXECUTED OR NOT. IT SHALL BE UNLAWFUL FOR ANY PERSON TO DUPLICATE OR TO MAKE COPIES OF SAID DOCUMENTS FOR USE IN THE REPETITION OF AND FOR OTHER PROJECTS OR BUILDINGS, WHETHER EXECUTED PARTLY OR IN WHOLE, WITHOUT THE WRITTEN CONSENT OF THE ARCHITECT OR AUTHOR OF SAID DOCUMENTS.

	DATE	NO.	REVISIONS	CHK	DATE
CADD	JUL 2018				
DESIGNED	DATE				
EAPB	JUL 2018				
APPROVED	DATE				
CCA	JUL 2018				

PAPER SIZE	SHEET NO.
20X30	F-0203
SCALE	PROJECT NO.
AS SHOWN	SO-G-17-036

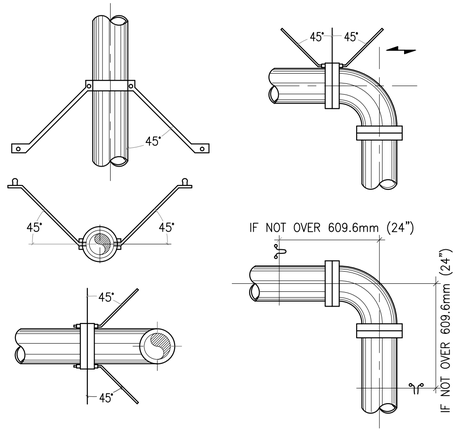

1 ACCEPTABLE TYPES OF SWAY BRACING

F-0204 SCALE NTS

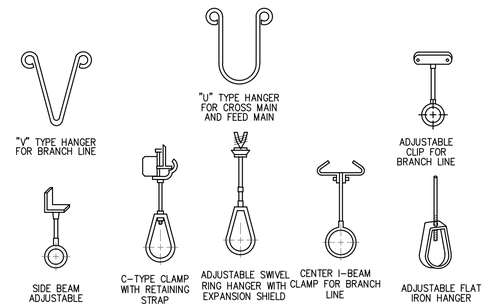

2 ACCEPTABLE TYPES OF HANGER

F-0204 SCALE NTS

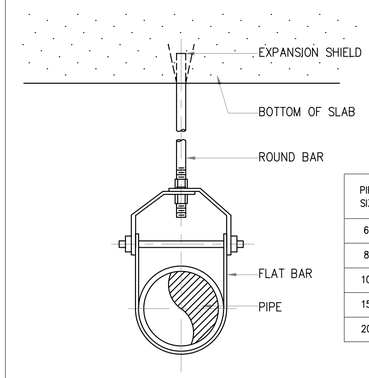

PIPE SIZE	FLAT BAR		ROUND BAR
	LOWER	UPPER	
65	4.8 x 32	4.8 x 32	12.7
80	4.8 x 32	4.8 x 32	12.7
100	4.8 x 32	6.4 X 32	15.9
150	4.8 x 32	6.4 X 32	19
200	4.8 x 32	6.4 X 32	25.4

3 ADJUSTABLE CLEVIS PIPE HANGER DETAIL

F-0204 SCALE NTS

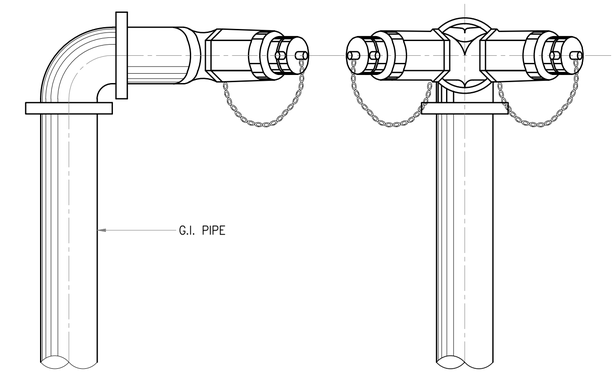

5 ROOF MANIFOLD CONNECTION DETAIL

F-0204 SCALE NTS

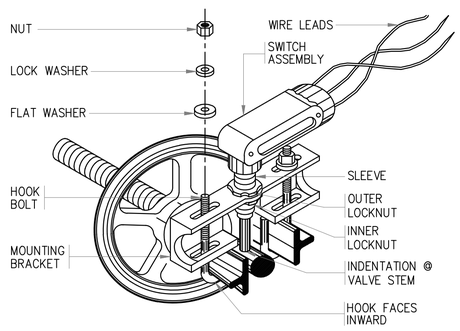

FOR SMALLER VALVES

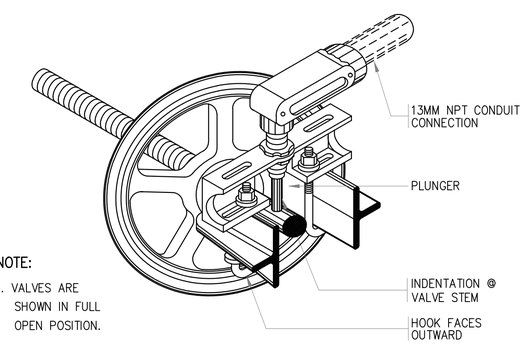

NOTE:

1. VALVES ARE SHOWN IN FULL OPEN POSITION.

FOR LARGER VALVES

4 SUPERVISORY SWITCH CONNECTION DETAIL

F-0204 SCALE NTS

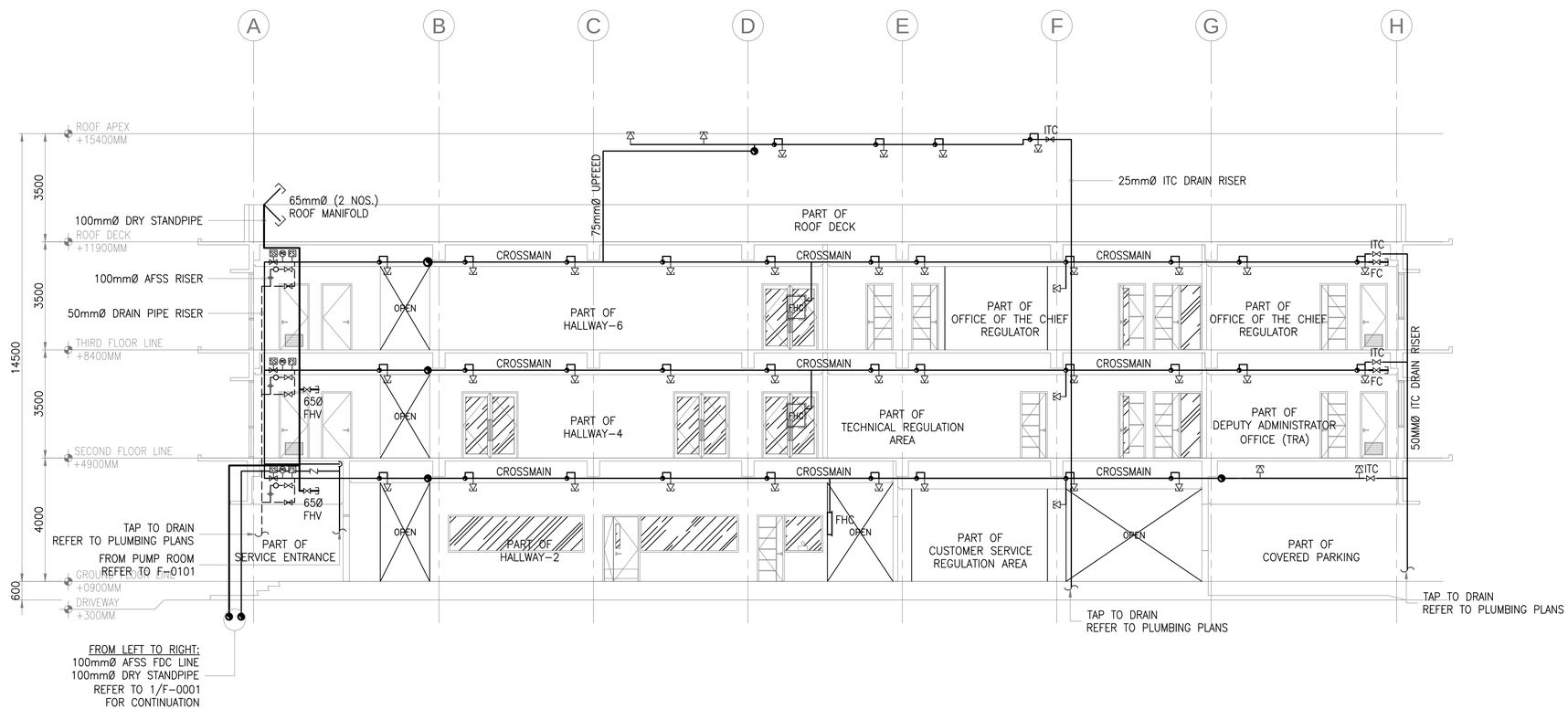

5 SCHEMATIC RISER DIAGRAM

F-0204 SCALE 1:100M

a.c.ong CONSULTING INC. Engineering + Management ISO 9001:2015 Certified 2F LTA Building 118 Perea Street, Legaspi Village, 1229 Makati City, Philippines Tel. Nos.: +63 2 8935827 Fax No.: +63 2 8935829 Email: acoconsulting@aco.com.ph Website: www.aco.com.ph	CERTIFIED BY MARCIANO P. PAYUMO JR. PROFESSIONAL MECHANICAL ENGINEER	REG. NO.: 5178 TIN NO. : 196-856-107 PTR NO. : 8967686 DATE : JANUARY 04, 2018 PLACE : PAMPANGA	OWNER METROPOLITAN WATERWORKS AND SEWERAGE SYSTEM REGULATORY OFFICE MWSS COMPOUND, KATIPUNAN AVENUE, MATANDANG BALARA, QUEZON CITY	PROJECT TITLE/LOCATION 3-STOREY OFFICE BUILDING WITH ROOF DECK MWSS COMPOUND, KATIPUNAN AVENUE, MATANDANG BALARA, QUEZON CITY	CLIENT PROJECT PROPONENT MELCHOR S. CORDOVA ALTERNATE END-USER FOR RO BUILDING	APPROVED BY: PATRICK LESTER N. TY CHIEF REGULATOR, MWSS RO	SHEET CONTENTS MISCELLANEOUS DETAIL (PART 3 OF 3) SCHEMATIC RISER DIAGRAM

R.A. 9266 SEC. 33
DRAWINGS AND SPECIFICATIONS AND CONTRACT DOCUMENTS DULY SIGNED, STAMPED OR SEALED AS INSTRUMENTS FOR SERVICE ARE THE INTELLECTUAL PROPERTY AND DOCUMENTS OF ARCHITECT, WHETHER THE OBJECT FOR WHICH THEY ARE MADE IS EXECUTED OR NOT. IT SHALL BE UNLAWFUL FOR ANY PERSON TO DUPLICATE OR TO MAKE COPIES OF SAID DOCUMENTS FOR USE IN THE REPETITION OF AND FOR OTHER PROJECTS OR BUILDINGS, WHETHER EXECUTED PARTLY OR IN WHOLE, WITHOUT THE WRITTEN CONSENT OF THE ARCHITECT OR AUTHOR OF SAID DOCUMENTS.

CADD	DATE	NO.	REVISIONS	CHK	DATE	PAPER SIZE	SHEET NO.
RDGL	JUL 2018					20X30	F-0204
DESIGNED	DATE					SCALE	PROJECT NO.
EAPB	JUL 2018					AS SHOWN	SO-G-17-036
APPROVED	DATE						
CCA	JUL 2018						